SPARE PARTS CATALOGUE

Brand: NANNI DIESEL

Model: Moteur N4.85 N4.100

Version: Standard

Nanni Industries S.A.
Z.I. - B.P. 107 11, Avenue Mariotte 33260 La Teste

Web: http://www.nannidiesel.com
Tel. 33 (0) 5 56 22 30 60
Fax. 33 (0) 5 56 22 30 79

Brand: NanniDiesel

Model: Moteur N4.85 N4.100

Version: Standard

Subassembly: Crank case / Cylinders

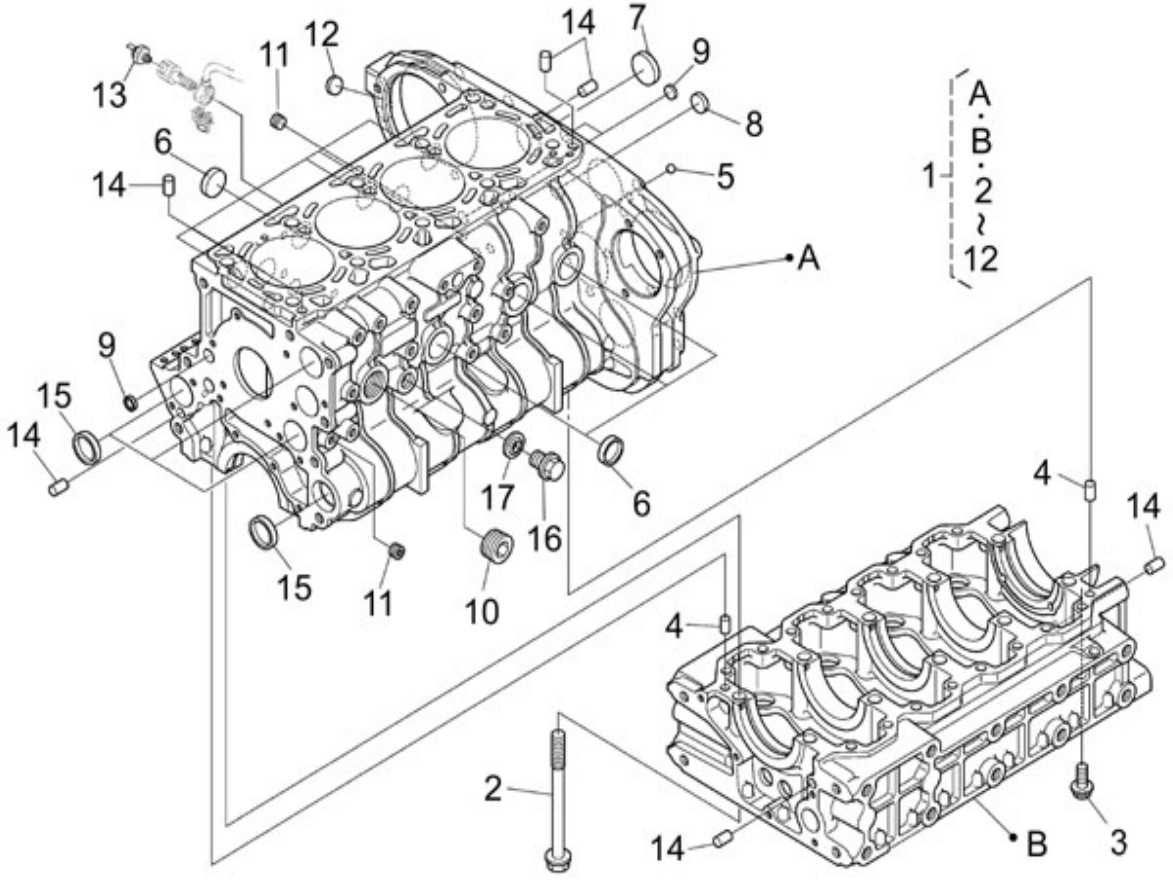

N.	Item	Description	Qty	Notes
1	970314896	ASSY CRANKCASE	1	
2	970314810	BOLT	10	
3	970314892	BOLT,FLANGE	16	
4	970313523	PIN,STRAIGHT	2	
5	970302400	BEARING,BALL	2	
6	970140904	CAP, FREEZE	9	
7	970301938	CAP,FREEZE	1	
8	970314253	CAP,SEALING	1	
9	970313558	CAP,SEALING	3	
10	970310311	PLUG (<= N°KT08090422)	1	
11	970490108	PLUG,SOCK	2	
12	970314796	CAP,SEALING	1	
13	970301919	SWITCH,OIL	1	
14	970313523	PIN,STRAIGHT	6	
15	970301938	CAP,FREEZE	4	
16	970313526	PLUG	1	
17	970313527	GASKET	1	

nannidiesel energy in blue

Nanni Industries S.A.S.
Z.I. - B.P. 107 11, Avenue Mariotte 33260 La Teste

Web: http://www.nannidiesel.com
Tel. 33 (0) 5 56 22 30 60
Fax. 33 (0) 5 56 22 30 79

Brand: NanniDiesel

Model: Moteur N4.85 N4.100

Version: Standard

Subassembly: Timing case

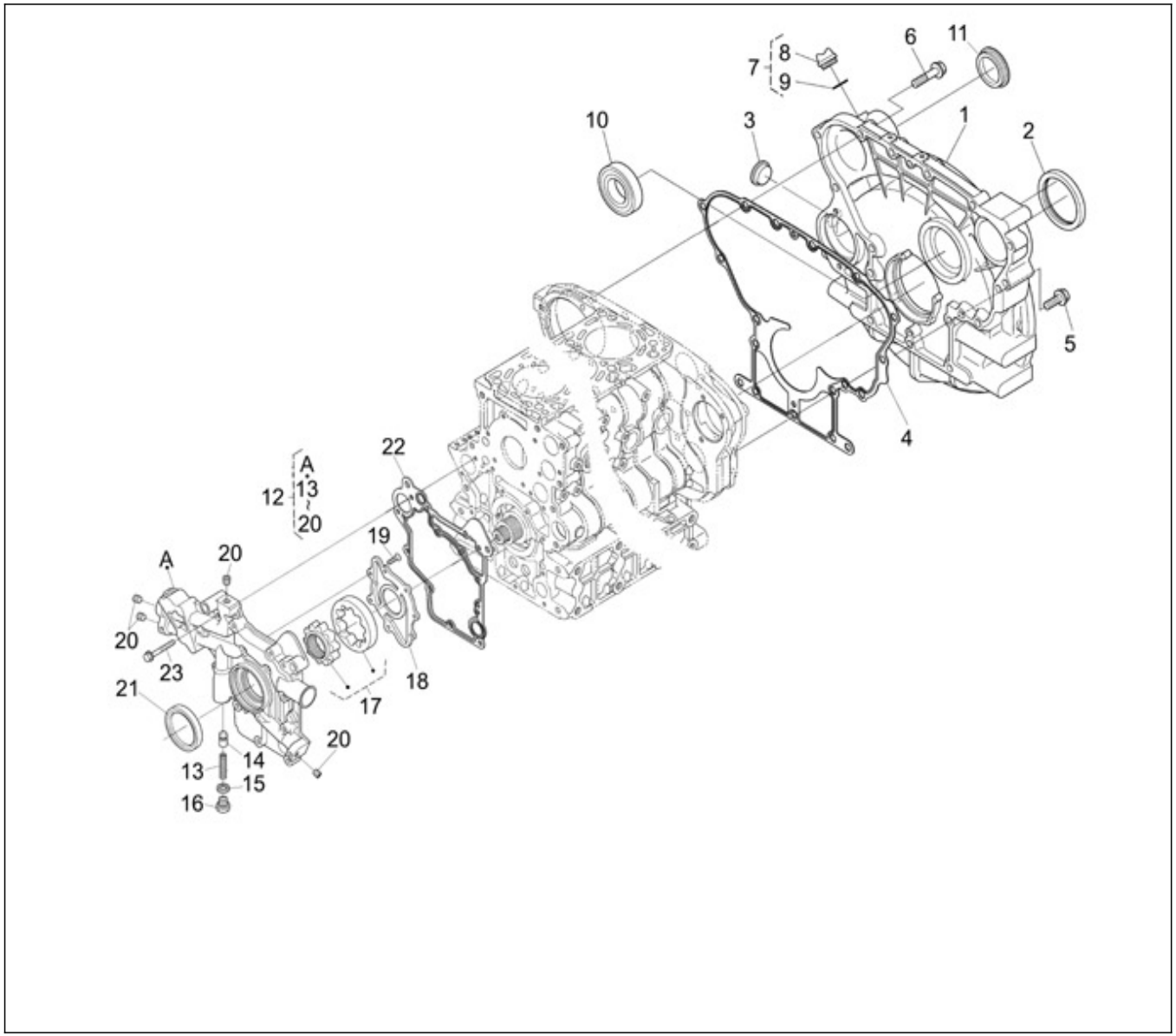

N.	Item	Description	Qty	Notes
1	970314897	HOUSING,FLYWHEEL	1	
2	970307919	SEAL,OIL	1	
3	970310880	COVER	1	
4	970314920	GASKET,HOUSING	1	
5	970313591	BOLT,FLANGE	8	
6	970314893	BOLT,FLANGE	8	
7	970313559	ASSY PLUG,O/FILLER	1	
8	970313464	PLUG	1	
9	970313560	O RING	1	
10	970314923	BEARING,ROLLER	1	
11	970314952	PLUG	1	
12	970314811	ASSY COVER,FRONT	1	
13	970310787	SPRING	1	
14	970313543	VALVE,RELIEF	1	
15	970310374	GASKET,COPPER (BEFORE N°KTE08070398)	1	
16	970310789	PLUG	1	
17	970314864	ASSY ROTOR,OIL PUMP	1	
18	970314865	COVER,OIL PUMP	1	
19	970313544	SCREW,CSK-HD	7	
20	970310793	PLUG	4	
21	970310794	SEAL	1	
22	970314812	GASKET,FRONT COVER	1	
23	970313705	BOLT,FLANGE	13	

nannidiesel energy in blue

Nanni Industries S.A.S.

Z.I. - B.P. 107 11, Avenue Mariotte 33260 La Teste

Web: http://www.nannidiesel.com

Tel. 33 (0) 5 56 22 30 60

Fax. 33 (0) 5 56 22 30 79

Brand: NanniDiesel

Model: Moteur N4.85 N4.100

Version: Standard

Subassembly: Oil pan

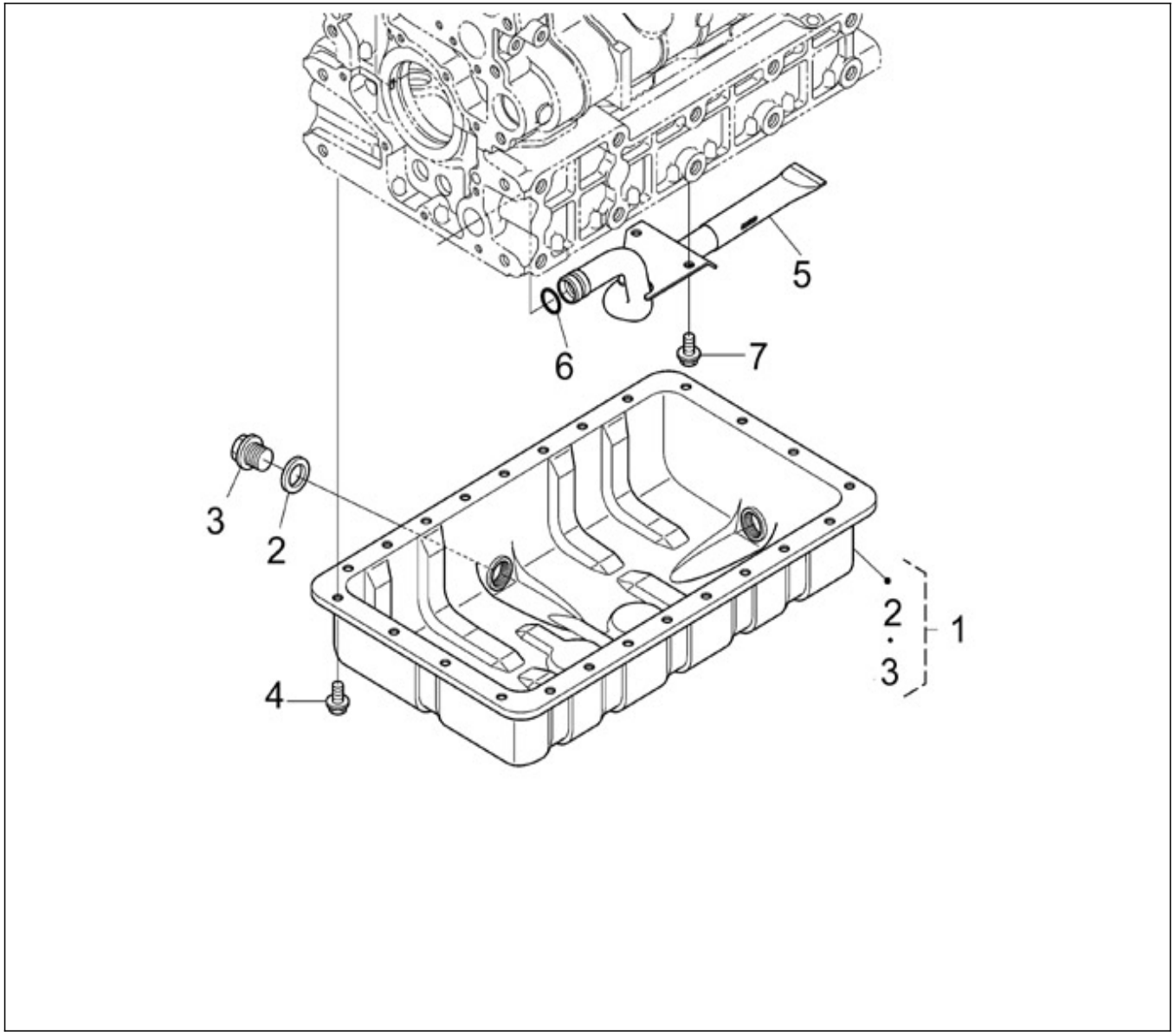

N.	Item	Description	Qty	Notes
1	970314915	KIT OIL PAN	1	
2	970310374	GASKET,COPPER (BEFORE N°KTE08070398)	2	
3	970307907	PLUG,DRAIN	2	
4	970314788	BOLT,FLANGE	24	
5	970314933	FILTER,OIL	1	
6	970314181	O RING	1	
7	970314788	BOLT,FLANGE	2	

nannidiesel energy in blue

Nanni Industries S.A.S.
Z.I. - B.P. 107 11, Avenue Mariotte 33260 La Teste

Web: http://www.nannidiesel.com
Tel. 33 (0) 5 56 22 30 60
Fax. 33 (0) 5 56 22 30 79

Brand: NanniDiesel

Model: Moteur N4.85 N4.100

Version: Standard

Subassembly: Cylinder head cover

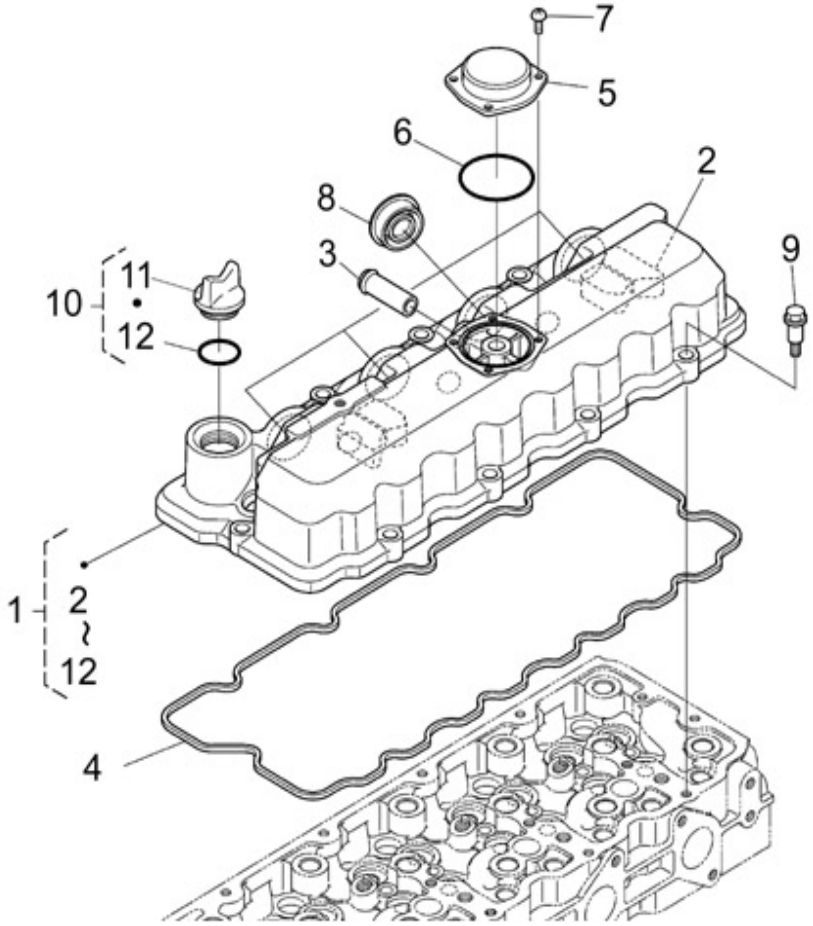

N.	Item	Description	Qty	Notes
1	970314899	ASSY COVER,CYL.HEAD	1	
2	970310348	ELEMENT,BREATHER	4	
3	970310806	UNION	1	
4	970314822	GASKET,HEAD COVER	1	
5	970312972	COVER,BREATHER	1	
6	970312973	O RING,BREATHER	1	
7	970310810	SCREW	4	
8	970313561	SEAL,INJECTION PIPE	4	
9	970312975	BOLT	10	
10	970313559	ASSY PLUG,O/FILLER	1	
11	970313464	PLUG	1	
12	970313560	O RING	1	

nannidiesel energy in blue

Nanni Industries S.A.S.
Z.I. - B.P. 107 11, Avenue Mariotte 33260 La Teste

Web: http://www.nannidiesel.com
Tel. 33 (0) 5 56 22 30 60
Fax. 33 (0) 5 56 22 30 79

Brand: NanniDiesel

Model: Moteur N4.85 N4.100

Version: Standard

Subassembly: Oil Gauge

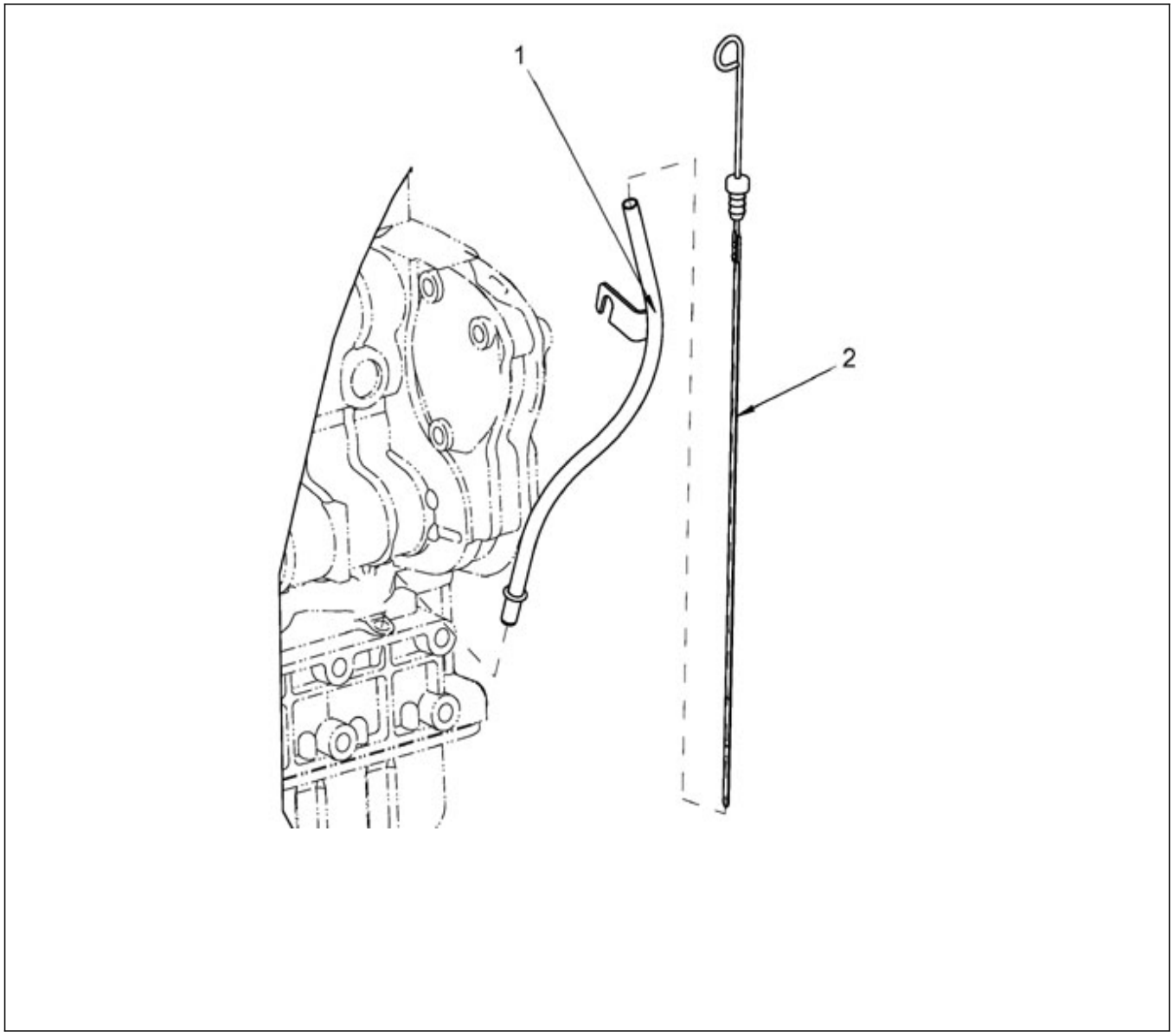

N.	Item	Description	Qty	Notes
1	51312003	N4.100 N4.85 - GUIDE,TUBE OIL DIPSTICK	1	
2	970314994	GAUGE,OIL	1	

nannidiesel
energy in blue

Nanni Industries S.A.S.
Z.I. - B.P. 107 11, Avenue Mariotte 33260 La Teste

Web: http://www.nannidiesel.com
Tel. 33 (0) 5 56 22 30 60
Fax. 33 (0) 5 56 22 30 79

Brand: NanniDiesel

Model: Moteur N4.85 N4.100

Version: Standard

Subassembly: Cylinder head

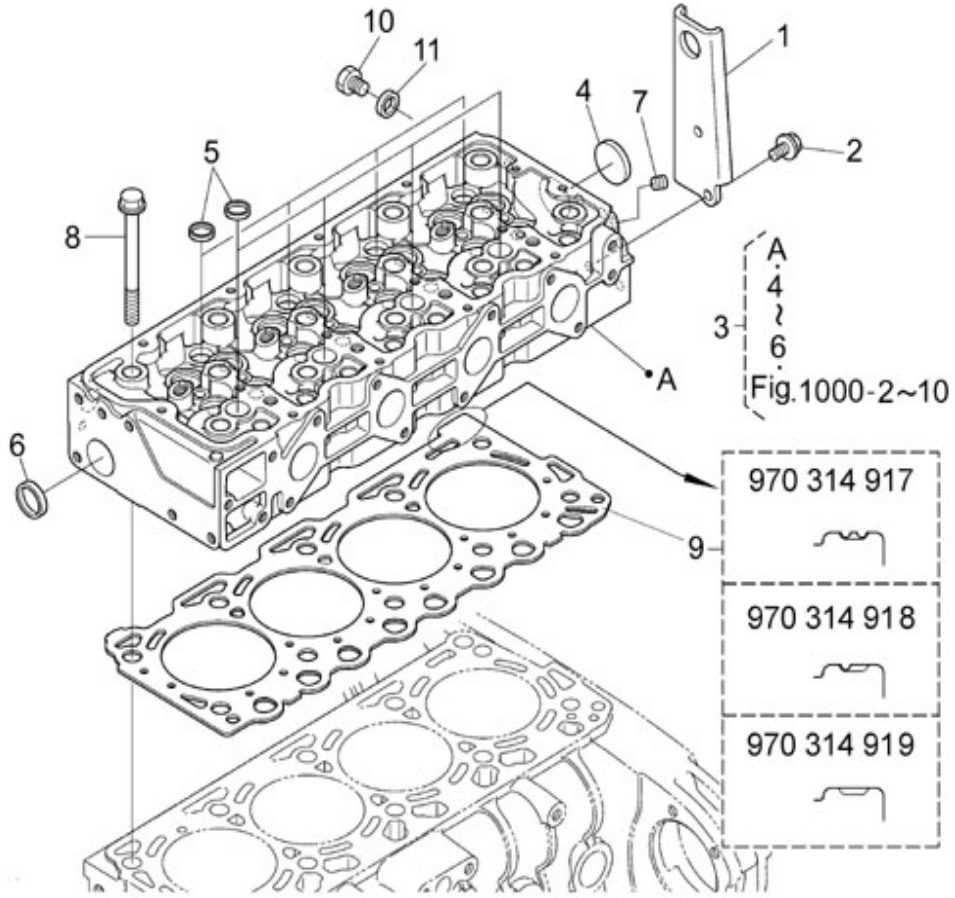

N.	Item	Description	Qty	Notes
1	970314916	HOOK,ENGINE	1	
2	970310835	BOLT,FLANGE	2	
3	970314809	ASSY CYLINDER HEAD	1	
4	970301938	CAP,FREEZE	1	
5	970314253	CAP,SEALING	8	
6	970140904	CAP, FREEZE	1	
7	970490108	PLUG,SOCK	1	
8	970314810	BOLT	10	
9	970314917	GASKET,CYLINDER HEAD - STD/2 NOTCH	1	
9	970314918	GASKET,CYLINDER HEAD - SUITABILITY/1 NOTCH	1	
9	970314919	GASKET,CYLINDER HEAD - SUITABILITY/NOT NOTCH	1	
10	970313698	PLUG,DRAIN	1	
11	970432132	GASKET,RING	1	

nannidiesel energy in blue

Nanni Industries S.A.S.
Z.I. - B.P. 107 11, Avenue Mariotte 33260 La Teste

Web: http://www.nannidiesel.com
Tel. 33 (0) 5 56 22 30 60
Fax. 33 (0) 5 56 22 30 79

Brand: NanniDiesel

Model: Moteur N4.85 N4.100

Version: Standard

Subassembly: Valves & Springs

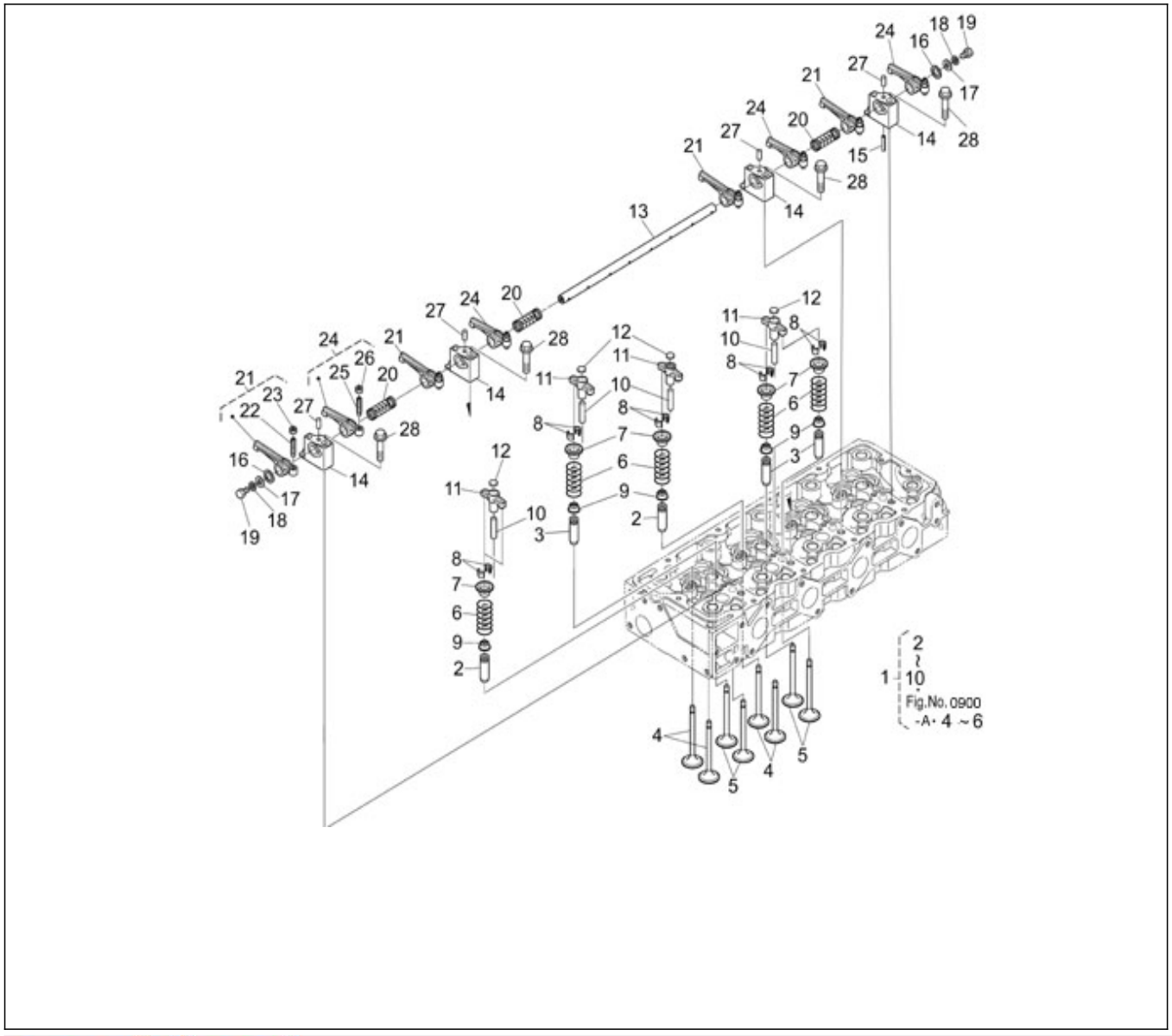

N.	Item	Description	Qty	Notes
1	970314809	ASSY CYLINDER HEAD	1	
2	970302720	GUIDE,VALVE INTAKE 4.150	8	
3	970302721	GUIDE,VALVE EXHAUST 4.150	8	
4	970314814	VALVE,INLET	8	
5	970314815	VALVE,EXHAUST	8	
6	970311007	SPRING VALVE	16	
7	970491004	RETAINER,VALVE SPRING	16	
8	970491005	COLLET,VALVE SPRING	16	
9	970311008	INLET VALVE SEAL	16	
10	970313709	SHAFT,VALVE	8	
11	970314806	ARM,VALVE BRIGE	8	
12	970311024	PAD	8	
13	970314818	SHAFT,ROCKER ARM	1	
14	970314820	BRACKET,ROCKER ARM	4	
15	970314795	PIN,SPRING	1	
16	970314821	WASHER	2	
17	970302025	WASHER,PLAIN D 8	2	
18	970490904	WASHER,SPRING D 8	2	
19	970312996	BOLT	2	
20	970314819	SPRING,ROCKER ARM	3	
21	970314816	ASSY ROCKER ARM,IN.	4	
22	970302019	SCREW,ADJUSTING	4	
23	970302021	NUT	4	
24	970314817	ASSY ROCKER ARM,EXH.	4	
25	970302019	SCREW,ADJUSTING	4	
26	970302021	NUT	4	
27	970313718	PIN,STRAIGHT	4	
28	970314790	BOLT,FLANGE	4	

nannidiesel energy in blue

Nanni Industries S.A.S.
Z.I. - B.P. 107 11, Avenue Mariotte 33260 La Teste

Web: http://www.nannidiesel.com
Tel. 33 (0) 5 56 22 30 60
Fax. 33 (0) 5 56 22 30 79

Brand: NanniDiesel

Model: Moteur N4.85 N4.100

Version: Standard

Subassembly: Camshaft

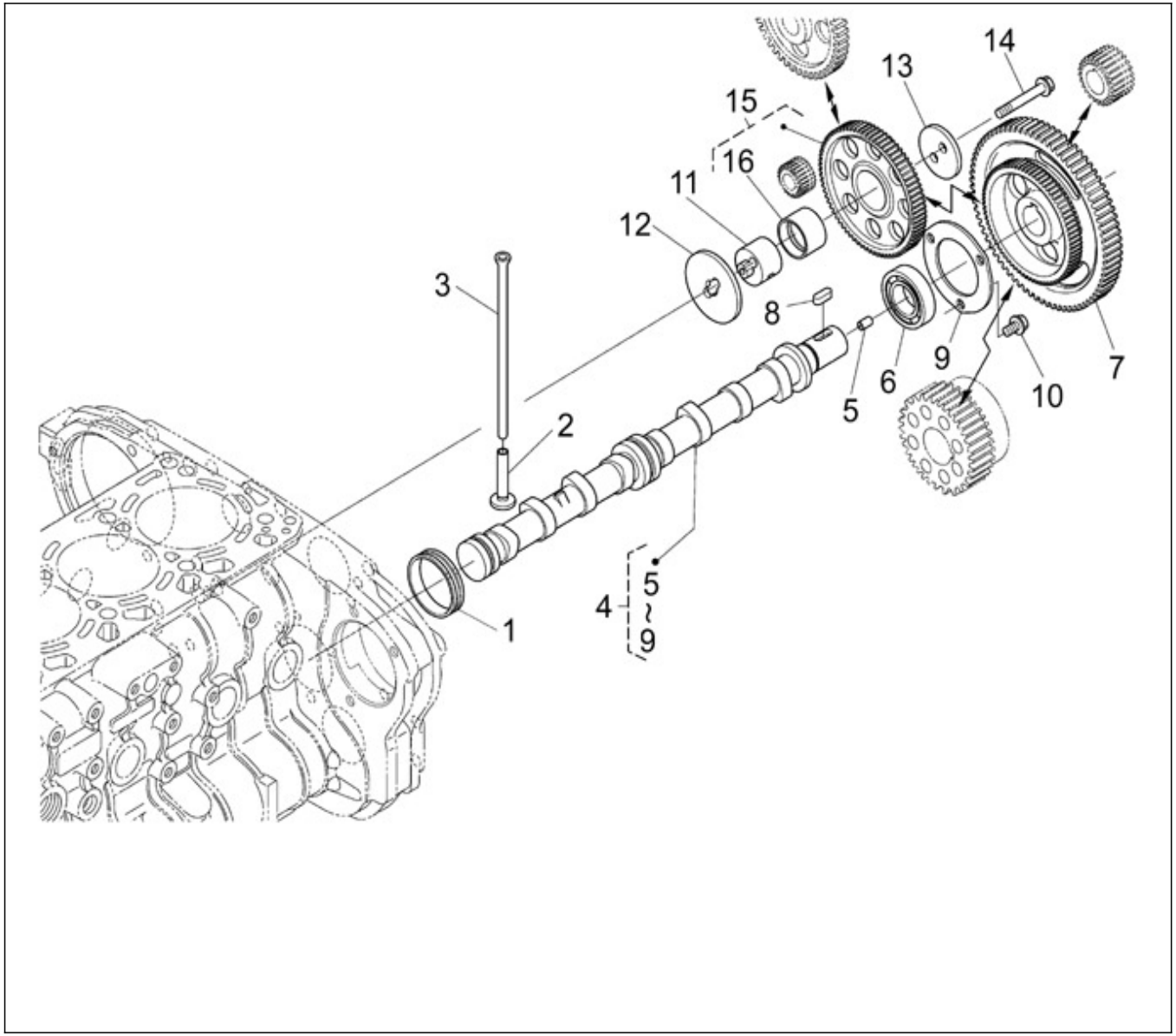

N.	Item	Description	Qty	Notes
1	970314828	COVER,CAMSHAFT	1	
2	970314824	TAPPET	8	
3	970314823	PUSH ROD	8	
4	970314921	ASSY CAMSHAFT	1	
5	970314934	PIN,PIPE	1	
6	970314924	BEARING,ROLLER	1	
7	970314925	GEAR,CAM	1	
8	970301966	KEY,FEATHER (N4.40 <= N°KTF08040092)	1	
9	970314827	STOPPER,CAMSHAFT	1	
10	970314788	BOLT,FLANGE	3	
11	970314846	SHAFT,IDLE GEAR	1	
12	970314847	COLLAR,IDLE GEAR	1	
13	970314848	COLLAR,IDLE GEAR	1	
14	970314894	BOLT,FLANGE	2	
15	970314845	COMP.GEAR,IDLE	1	
16	970314849	BUSH,IDLE GEAR	1	

nannidiesel energy in blue

Nanni Industries S.A.S.
Z.I. - B.P. 107 11, Avenue Mariotte 33260 La Teste

Web: http://www.nannidiesel.com
Tel. 33 (0) 5 56 22 30 60
Fax. 33 (0) 5 56 22 30 79

Brand: NanniDiesel

Model: Moteur N4.85 N4.100

Version: Standard

Subassembly: Camshaft

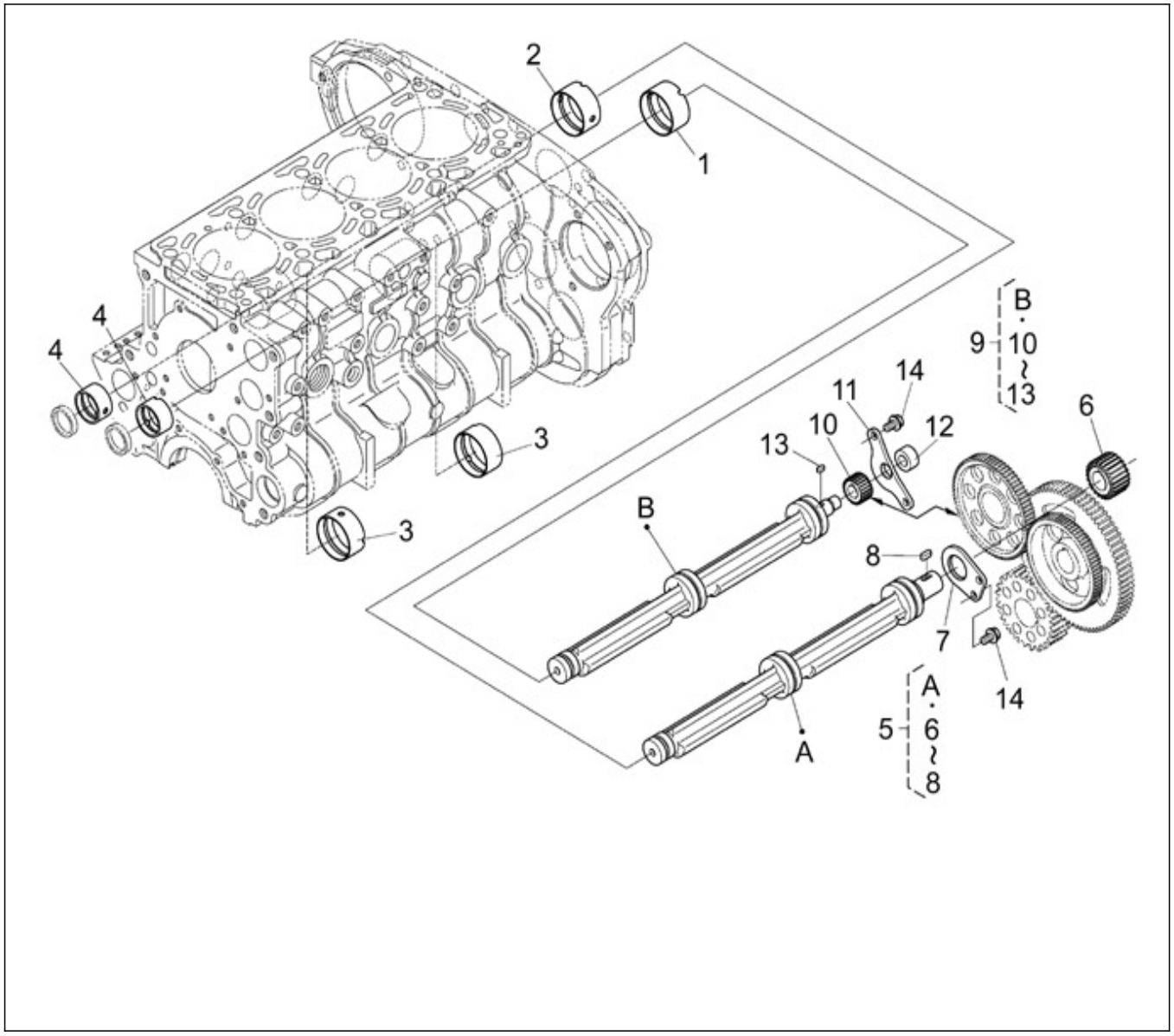

N.	Item	Description	Qty	Notes
1	970314858	METAL,BALANCER	1	
2	970314859	METAL,BALANCER	1	
3	970314860	METAL,BALANCER	2	
4	970314861	METAL,BALANCER	2	
5	970314851	ASSY SHAFT,BALANCER	1	
6	970314853	GEAR,BALANCER	1	
7	970314856	STOPPER	1	
8	970491106	KEY,FEATHER	1	
9	970314852	ASSY SHAFT,BALANCER	1	
10	970314854	GEAR,BALANCER	1	
11	970314857	STOPPER	1	
12	970314855	STOPPER	1	
13	970493118	KEY,FEATHER H-HE	1	
14	970310835	BOLT,FLANGE	4	

nannidiesel
energy in blue

Nanni Industries S.A.
Z.I. - B.P. 107 11, Avenue Mariotte 33260 La Teste

Web: http://www.nannidiesel.com
Tel. 33 (0) 5 56 22 30 60
Fax. 33 (0) 5 56 22 30 79

Brand: NanniDiesel

Model: Moteur N4.85 N4.100

Version: Standard

Subassembly: Speed control

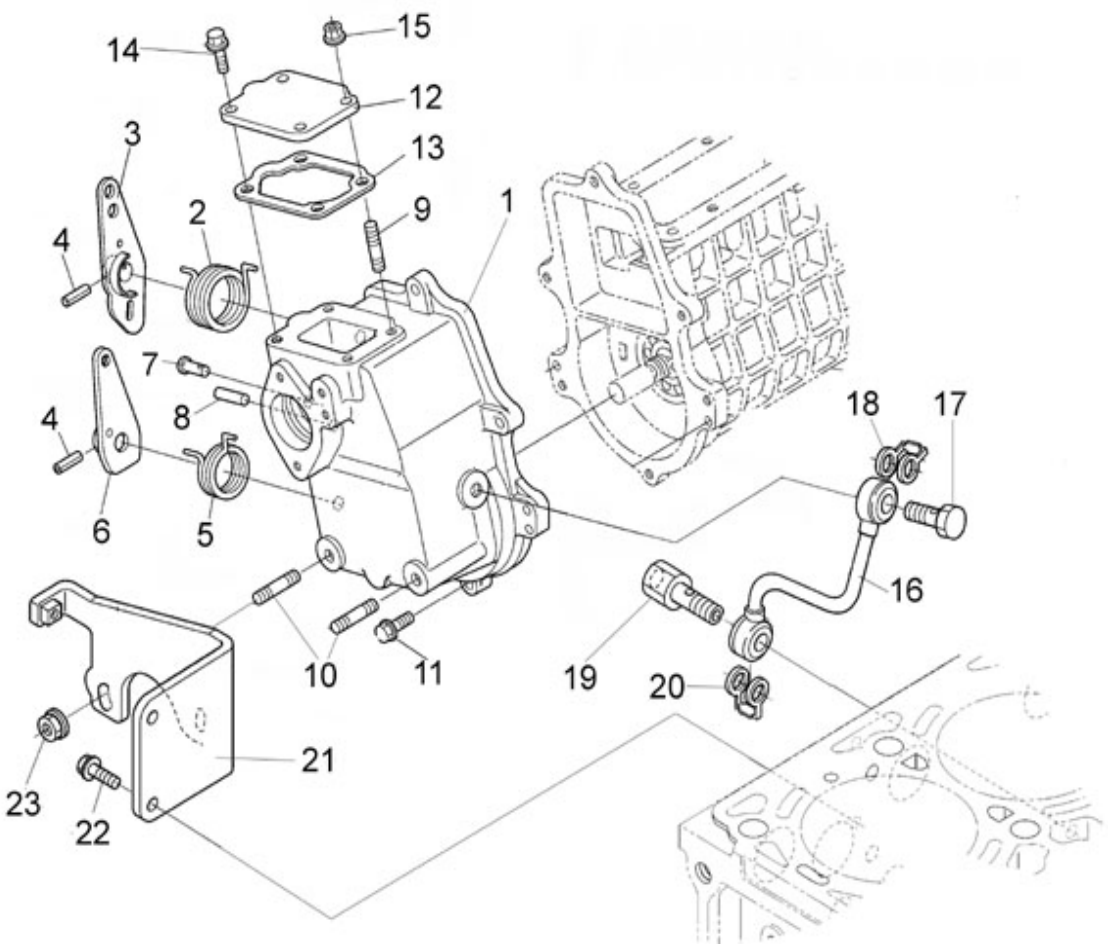

N.	Item	Description	Qty	Notes
1	970314881	HOUSING,GOVERNOR	1	
2	970314884	SPRING	1	
3	970314942	LEVER,SPEED CONTROL	1	
4	970310902	PIN,SPRING	2	
5	970314887	SPRING,RETURN	1	
6	970314885	LEVER,ENGINE STOP	1	
7	970490204	PIN,TIMING COVER	1	
8	970313609	PIN,STRAIGHT	1	
9	970144308	STUD	1	
10	970313655	STUD	2	
11	970313656	BOLT,FLANGE	6	
12	970314808	COVER,BOOST COM.HOUS	1	
13	970314803	GASKET,PLATE	1	
14	970313085	BOLT,FLANGE	3	
15	970313602	NUT,FLANGE (AFTER N°KTE08070398)	1	
16	970314862	COMP.PIPE,IP OIL	1	
17	970313612	BOLT,EYE JOINT	1	
18	970313613	GASKET	1	
19	970314863	BOLT,JOINT	1	
20	970314807	GASKET	1	
21	970314871	BRACKET,INJ.PUMP	1	
22	970310773	BOLT	4	
23	970310780	NUT,FLANGE	2	

nannidiesel energy in blue

Nanni Industries S.A.S.
Z.I. - B.P. 107 11, Avenue Mariotte 33260 La Teste

Web: http://www.nannidiesel.com
Tel. 33 (0) 5 56 22 30 60
Fax. 33 (0) 5 56 22 30 79

Brand: NanniDiesel

Model: Moteur N4.85 N4.100

Version: Standard

Subassembly: Crankshaft pistons

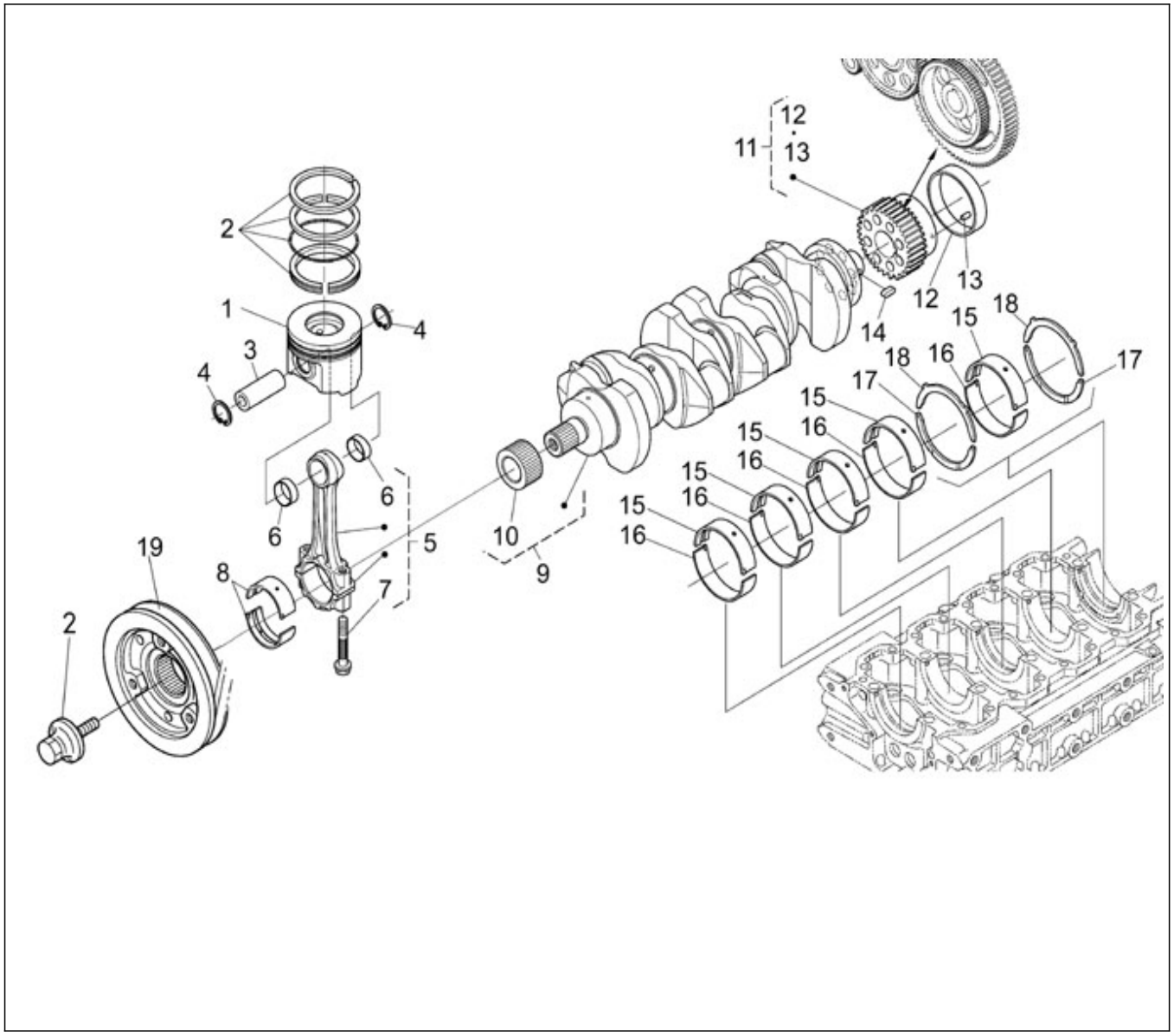

N.	Item	Description	Qty	Notes
1	970314901	PISTON - (05) STD	4	
2	970314829	ASSY PISTON RING - STD	4	
3	970314830	PIN,PISTON	4	
4	970314793	CIR CLIP,INTERNAL	8	
5	970314927	ASSY ROD,CONNECTING	4	
6	970314926	BUSH,PISTON PIN	8	
7	970314831	BOLT,CONNECTING ROD	8	
8	970314832	METAL,CRANKPIN - STD/BLUE/SET	4	
9	970314914	COMP.CRANKSHAFT	1	
10	970314866	GEAR,OIL PUMP DRIVE	1	
11	970314931	ASSY GEAR,CRANKSHAFT	1	
12	970307933	SLEEVE,CRANKSHAFT	1	
13	970301908	PIN,CYLINDRICAL	1	
14	970301966	KEY,FEATHER (N4.40 <= N°KTF08040092)	1	
15	970314836	METAL,CRANKSHAFT - STD	5	
16	970314928	METAL,CRANKSHAFT - STD	5	
17	970314837	METAL,SIDE - STD	2	
18	970314838	METAL,SIDE - STD	2	
19	970314949	PULLEY,FAN DRIVE	1	
20	970313589	BOLT	1	

nannidiesel energy in blue

Nanni Industries S.A.S.
Z.I. - B.P. 107 11, Avenue Mariotte 33260 La Teste

Web: http://www.nannidiesel.com
Tel. 33 (0) 5 56 22 30 60
Fax. 33 (0) 5 56 22 30 79

Brand: NanniDiesel

Model: Moteur N4.85 N4.100

Version: Standard

Subassembly: Flywheel

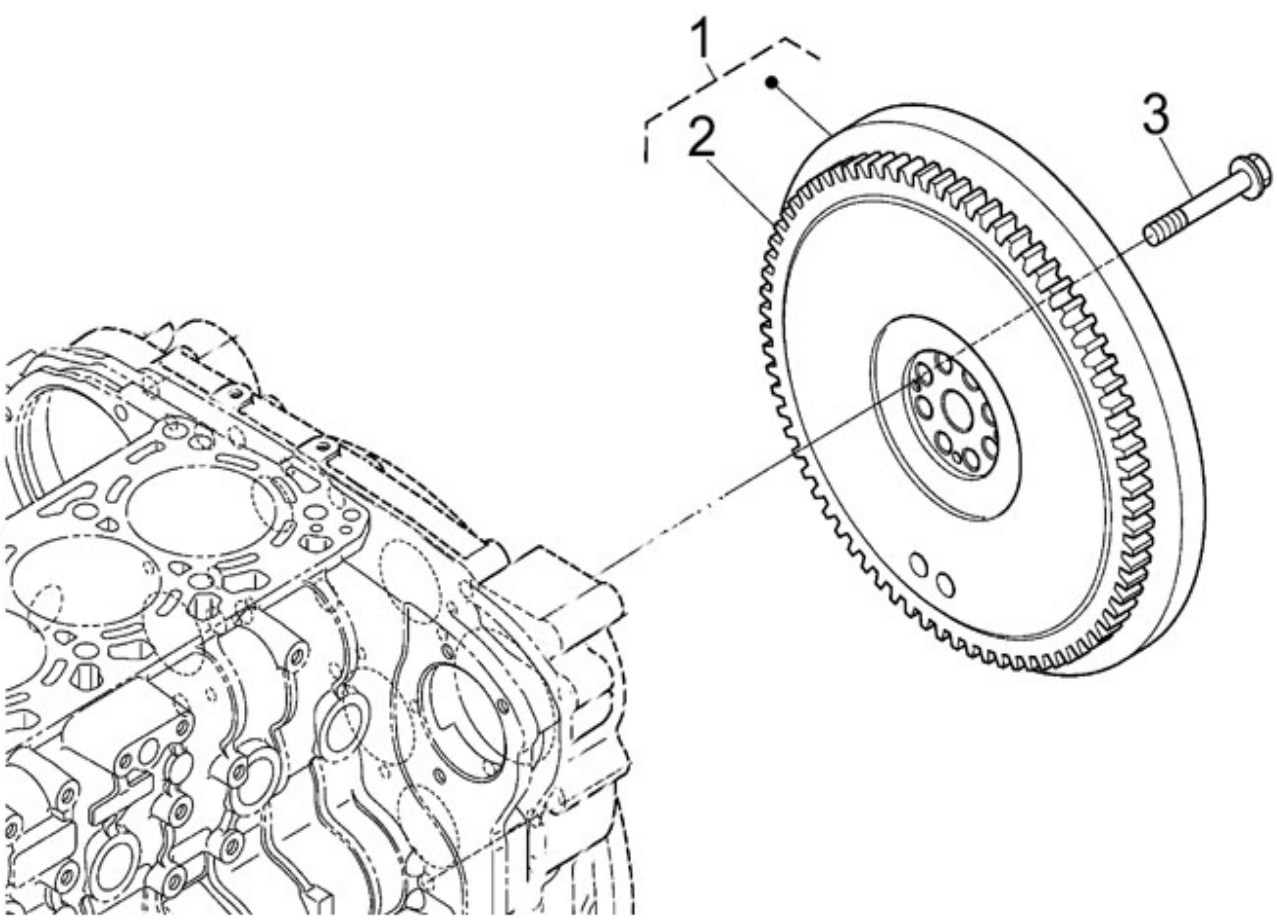

N.	Item	Description	Qty	Notes
1	970314932	COMP.FLYWHEEL	1	
2	970314947	GEAR,RING	1	
3	970314850	BOLT,FLYWHEEL	8	

nannidiesel
energy in blue

Nanni Industries S.A.S.
Z.I. - B.P. 107 11, Avenue Mariotte 33260 La Teste

Web: http://www.nannidiesel.com
Tel. 33 (0) 5 56 22 30 60
Fax. 33 (0) 5 56 22 30 79

Brand: NanniDiesel

Model: Moteur N4.85 N4.100

Version: Standard

Subassembly: Fuel feed pump

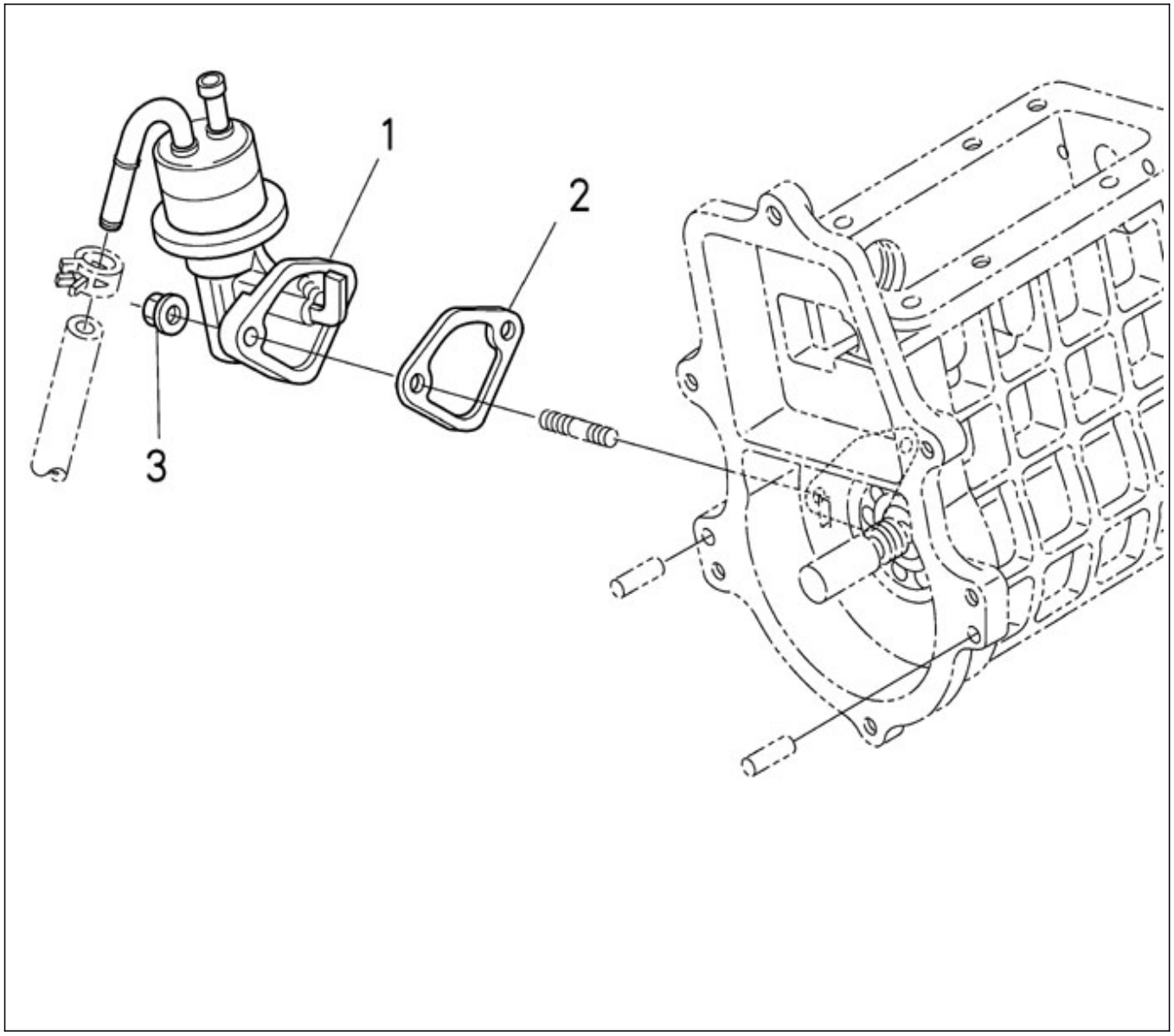

N.	Item	Description	Qty	Notes
1	970310965	PUMP,FUEL FEED	1	
2	970142512	GASKET,FUEL PUMP 2. 40	1	
3	970313602	NUT,FLANGE (AFTER N°KTE08070398)	2	

nannidiesel energy in blue

Nanni Industries S.A.
Z.I. - B.P. 107 11, Avenue Mariotte 33260 La Teste

Web: http://www.nannidiesel.com
Tel. 33 (0) 5 56 22 30 60
Fax. 33 (0) 5 56 22 30 79

Brand: NanniDiesel

Model: Moteur N4.85 N4.100

Version: Standard

Subassembly: Camshaft fuel

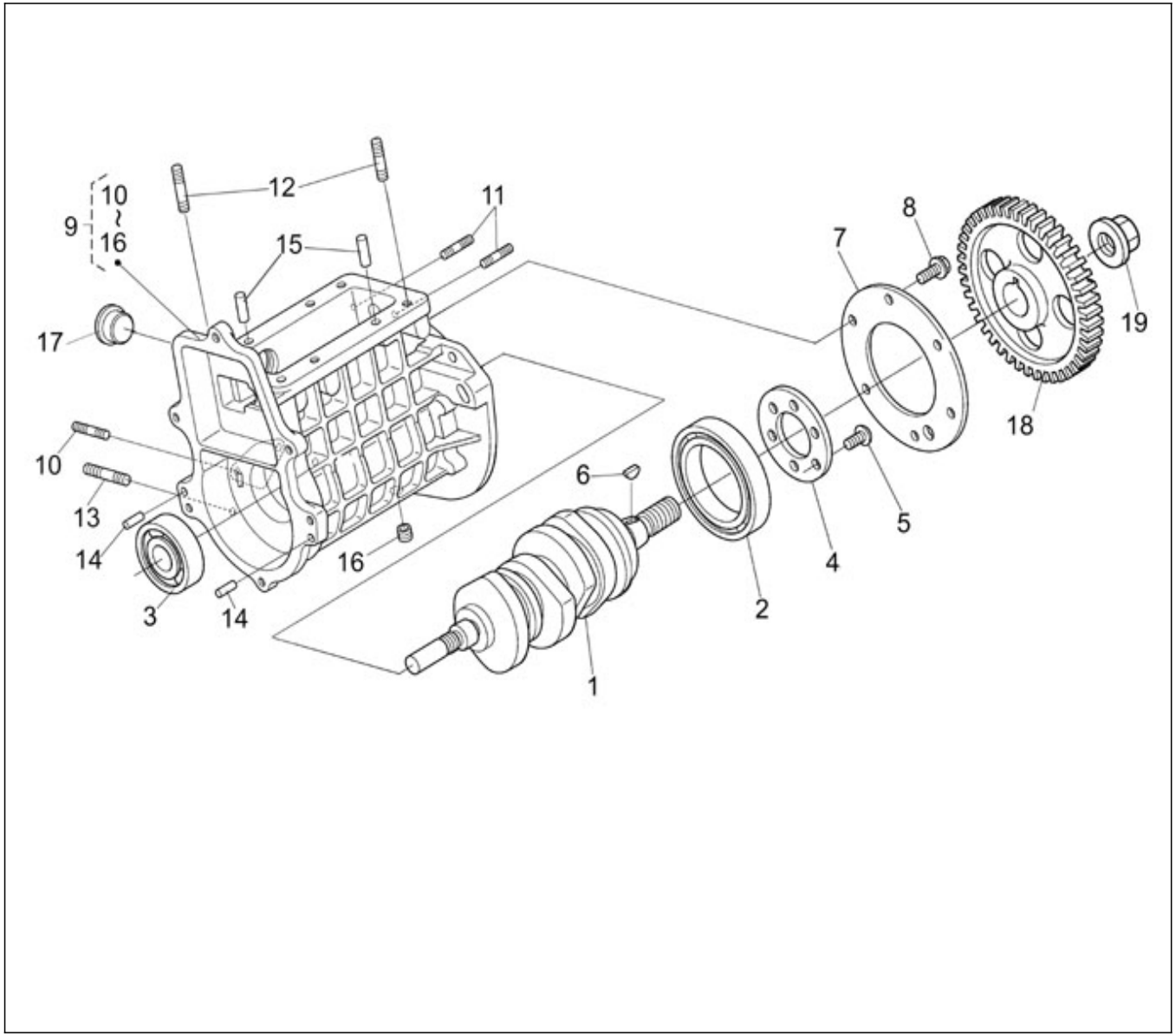

N.	Item	Description	Qty	Notes
1	970314900	CAMSHAFT,FUEL	1	
2	970314797	BEARING,BALL	1	
3	970314939	BEARING,BALL	1	
4	970314826	STOPPER	1	
5	970314792	SCREW,CR-REC-BD-HD	6	
6	970313643	KEY,WOODRUFF	1	
7	970314922	STOPPER,FUEL C/SHAFT	1	
8	970313085	BOLT,FLANGE	6	
9	970314938	ASSY HOUSING,I/P	1	
10	970313398	STUD	2	
11	970314798	STUD	2	
12	970312986	STUD	2	
13	970301935	STUD	2	
14	970313638	PIN,STRAIGHT	2	
15	970490122	PIN,CYLINDRICAL	2	
16	970490107	PLUG,SOCK (SERRAGE A 6NM + LOCTITE 542)	1	
17	970310892	COVER	1	
18	970314870	GEAR,INJECTION PUMP	1	
19	970314825	NUT,INJ.PUMP GEAR	1	

nannidiesel energy in blue

Nanni Industries S.A.
Z.I. - B.P. 107 11, Avenue Mariotte 33260 La Teste

Web: http://www.nannidiesel.com
Tel. 33 (0) 5 56 22 30 60
Fax. 33 (0) 5 56 22 30 79

Brand: NanniDiesel

Model: Moteur N4.85 N4.100

Version: Standard

Subassembly: Injection & Fuel pump

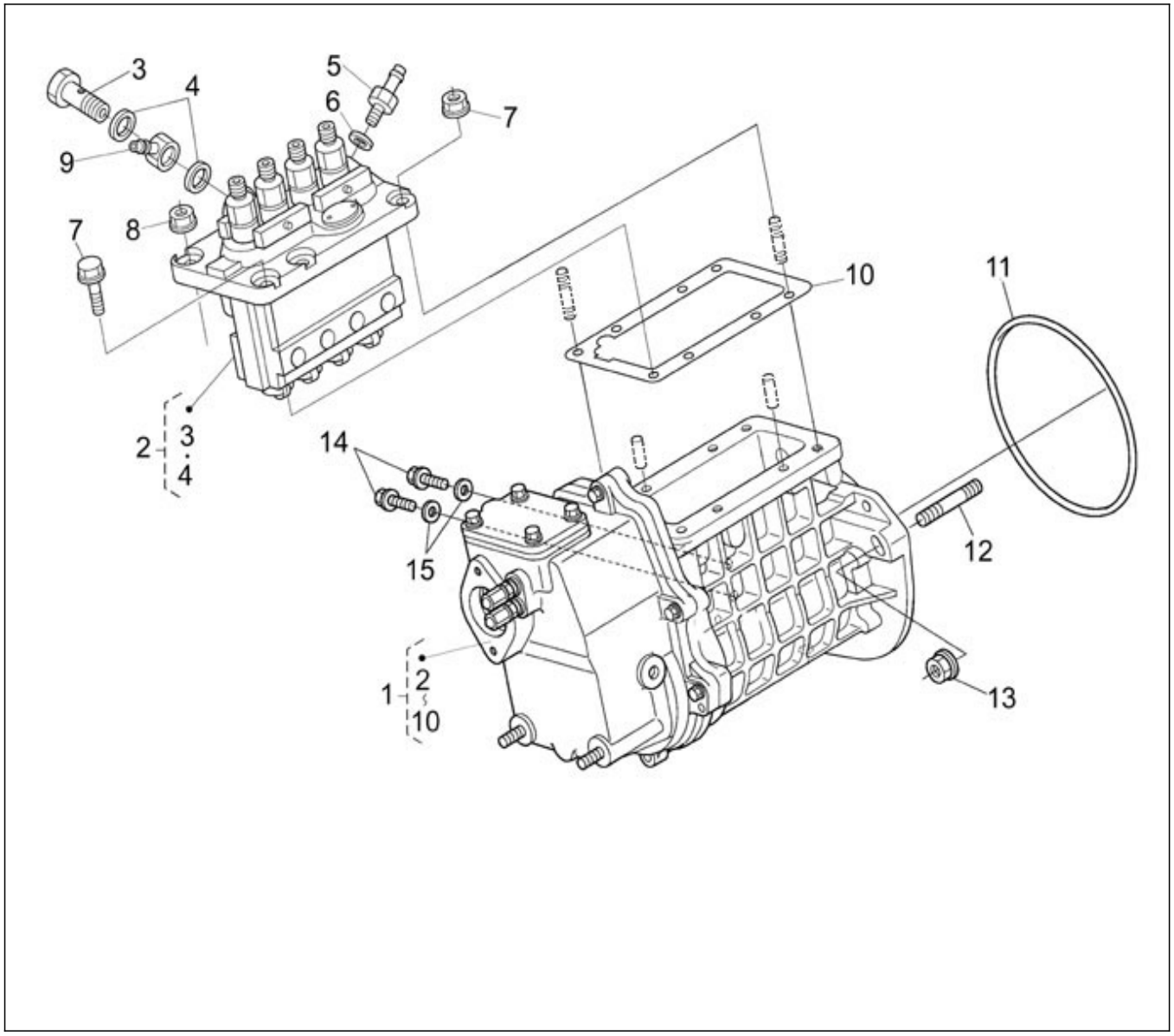

N.	Item	Description	Qty	Notes
1	970314908	PUMP,INJECTION UNIT	1	
2	970314909	ASSY PUMP,INJECTION	1	
3	970313601	SCREW,HOLLOW	1	
4	970307379	WASHER,NIPPLE	2	
5	970314799	SCREW,AIR BLEEDER	1	
6	970307612	GASKET	1	
7	970313599	BOLT,FLANGE	4	
8	970310780	NUT,FLANGE	2	
9	970310456	JOINT,EYE	1	
10	970314950	SHIM,INJECTION PUMP	1	
11	970314872	GASKET,INJ.PUMP	1	
12	970314805	STUD	3	
13	970310780	NUT,FLANGE	3	
14	970310773	BOLT	2	
15	970491131	WASHER,SEAL	2	

nannidiesel energy in blue

Nanni Industries S.A.S.
Z.I. - B.P. 107 11, Avenue Mariotte 33260 La Teste

Web: http://www.nannidiesel.com
Tel. 33 (0) 5 56 22 30 60
Fax. 33 (0) 5 56 22 30 79

Brand: NanniDiesel

Model: Moteur N4.85 N4.100

Version: Standard

Subassembly: Injection lines nozzles

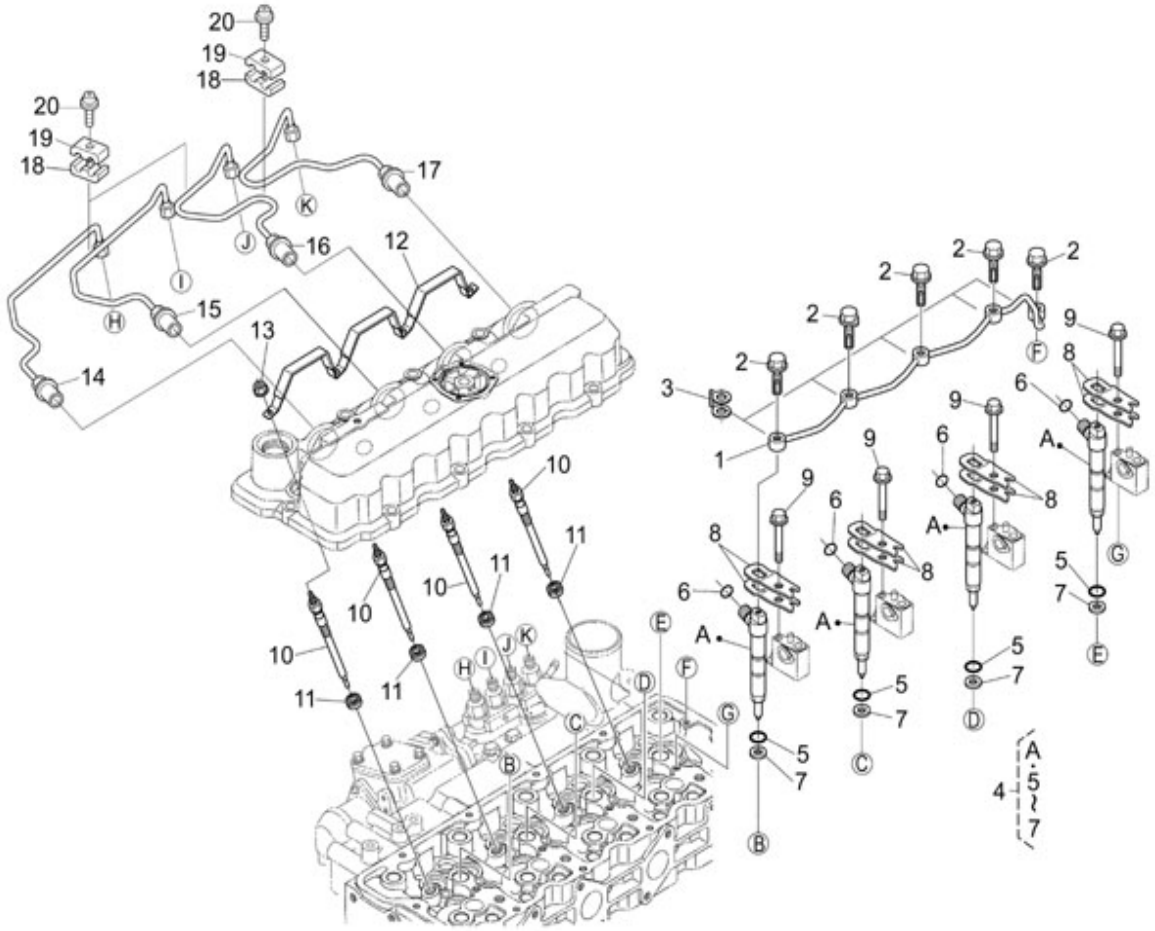

N.	Item	Description	Qty	Notes
1	970314869	ASSY PIPE,OVER FLOW	1	
2	970313626	BOLT,EYE JOINT	5	
3	970313627	GASKET	5	
4	970314910	KIT HOLDER NOZZLE	4	
5	970314874	O RING	4	
6	970313616	O RING	4	
7	970314951	GASKET	4	
8	970314873	CLAMP,INJ.NOZZLE	8	
9	970314787	BOLT,FLANGE	4	
10	970314948	GLOW PLUG	4	
11	970314888	SEAL,GLOW PLUG	4	
12	970314889	CORD,GLOW PLUG	1	
13	970307593	NUT,FLANGE	4	
14	970314875	PIPE,INJECTION	1	
15	970314876	PIPE,INJECTION	1	
16	970314877	PIPE,INJECTION	1	
17	970314878	PIPE,INJECTION	1	
18	970142114	CLAMP,FUEL LINES 1+2	3	
19	970142115	CLAMP,FUEL-LINES 1+2	3	
20	970492118	SCREW,M 5X 20 ROUND HEAD	3	

nannidiesel energy in blue

Nanni Industries S.A.S.
Z.I. - B.P. 107 11, Avenue Mariotte 33260 La Teste

Web: http://www.nannidiesel.com
Tel. 33 (0) 5 56 22 30 60
Fax. 33 (0) 5 56 22 30 79

Brand: NanniDiesel

Model: Moteur N4.85 N4.100

Version: Standard

Subassembly: Fuel filter Assy.

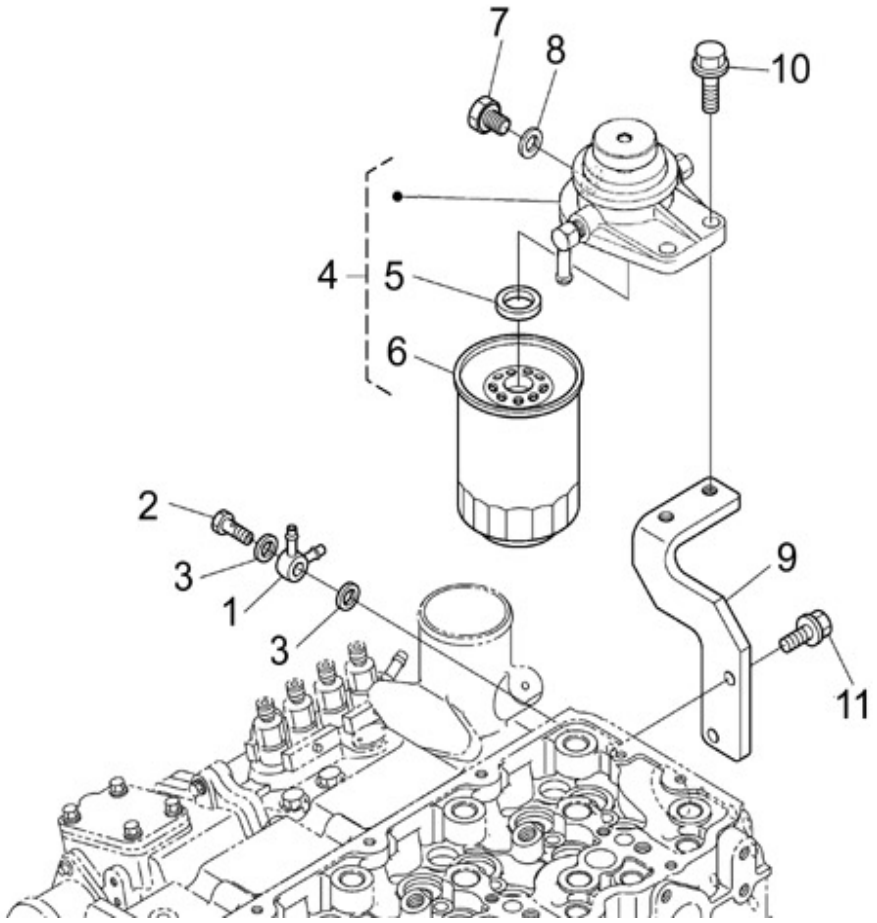

N.	Item	Description	Qty	Notes
1	970314895	UNION	1	
2	970310504	BOLT,EYE JOINT	1	
3	970491131	WASHER,SEAL	2	
4	970313668	ASSY FILTER,FUEL	1	
5	970313669	GASKET	1	
6	970313291	FILTER	1	
7	970313670	PLUG	1	
8	970150403	RING,SEAL (=> N° XA0001 <= 3Z0001)	1	
9	970314937	BRACKET,FUEL FILTER	1	
10	970314791	BOLT,FLANGE	2	
11	970313545	BOLT,FLANGE	2	

nannidiesel energy in blue

Nanni Industries S.A.S.
Z.I. - B.P. 107 11, Avenue Mariotte 33260 La Teste

Web: http://www.nannidiesel.com
Tel. 33 (0) 5 56 22 30 60
Fax. 33 (0) 5 56 22 30 79

Brand: NanniDiesel

Model: Moteur N4.85 N4.100

Version: Standard

Subassembly: Air filter .

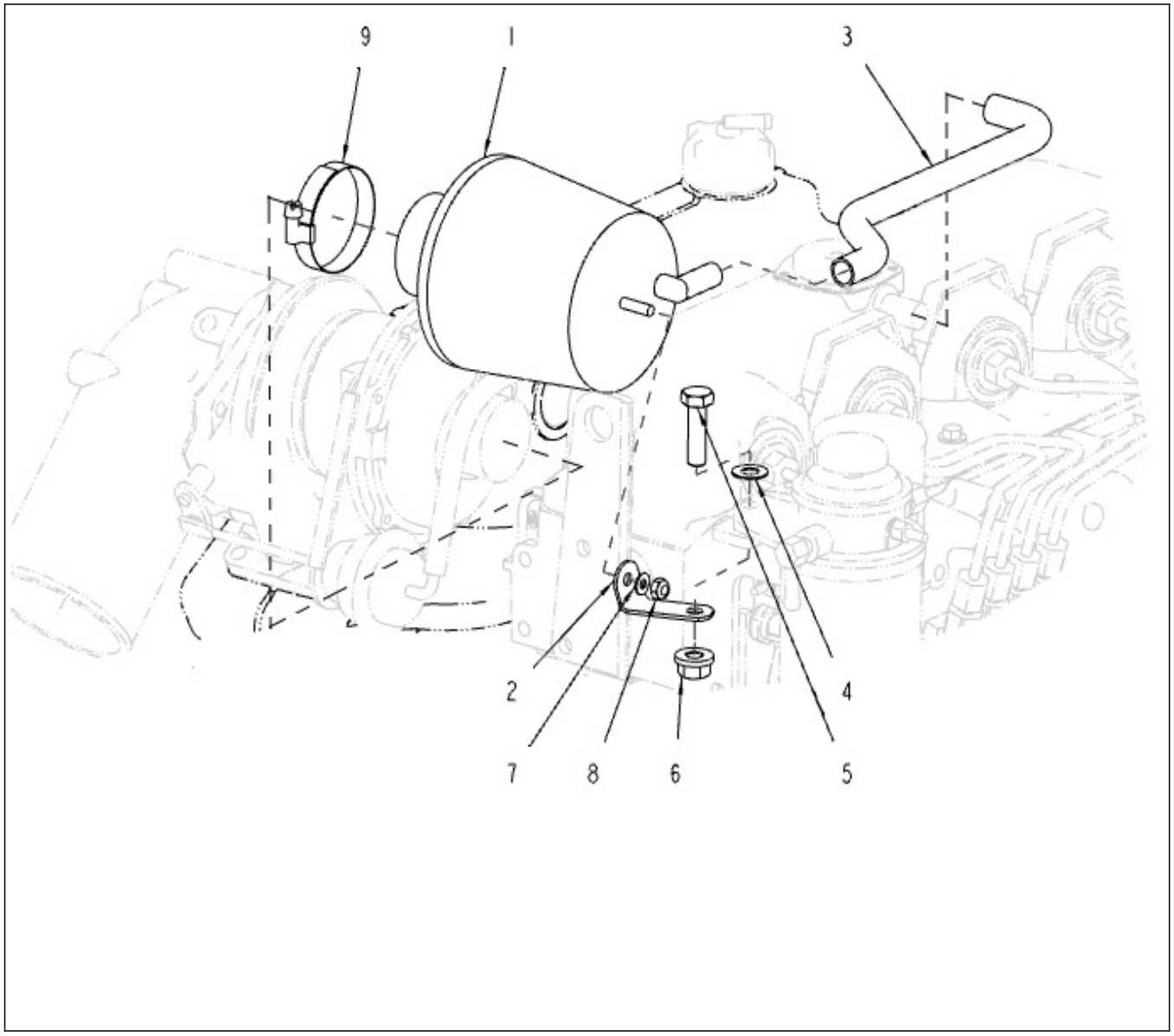

N.	Item	Description	Qty	Notes
0	39360921	NUT (A METTRE DANS LA BOURRICHE)	1	
1	48100936	FILTER	1	
2	95310877	BRACKET	1	
3	48328182	HOSE	1	
4	970119137	WASHER,CORRUGATED D10	1	
5	970304013	BOLT,HEX M10X1.25X 35 (+++FIX . SUPPORT D)	1	
6	39460917	NUT,FLANGE	1	
7	925103852	WASHER	1	
9	970634621	CLAMP,HOSE	1	

nannidiesel energy in blue

Nanni Industries S.A.S.
Z.I. - B.P. 107 11, Avenue Mariotte 33260 La Teste

Web: http://www.nannidiesel.com
Tel. 33 (0) 5 56 22 30 60
Fax. 33 (0) 5 56 22 30 79

Brand: NanniDiesel

Model: Moteur N4.85 N4.100

Version: Standard

Subassembly: Oil filter Assy

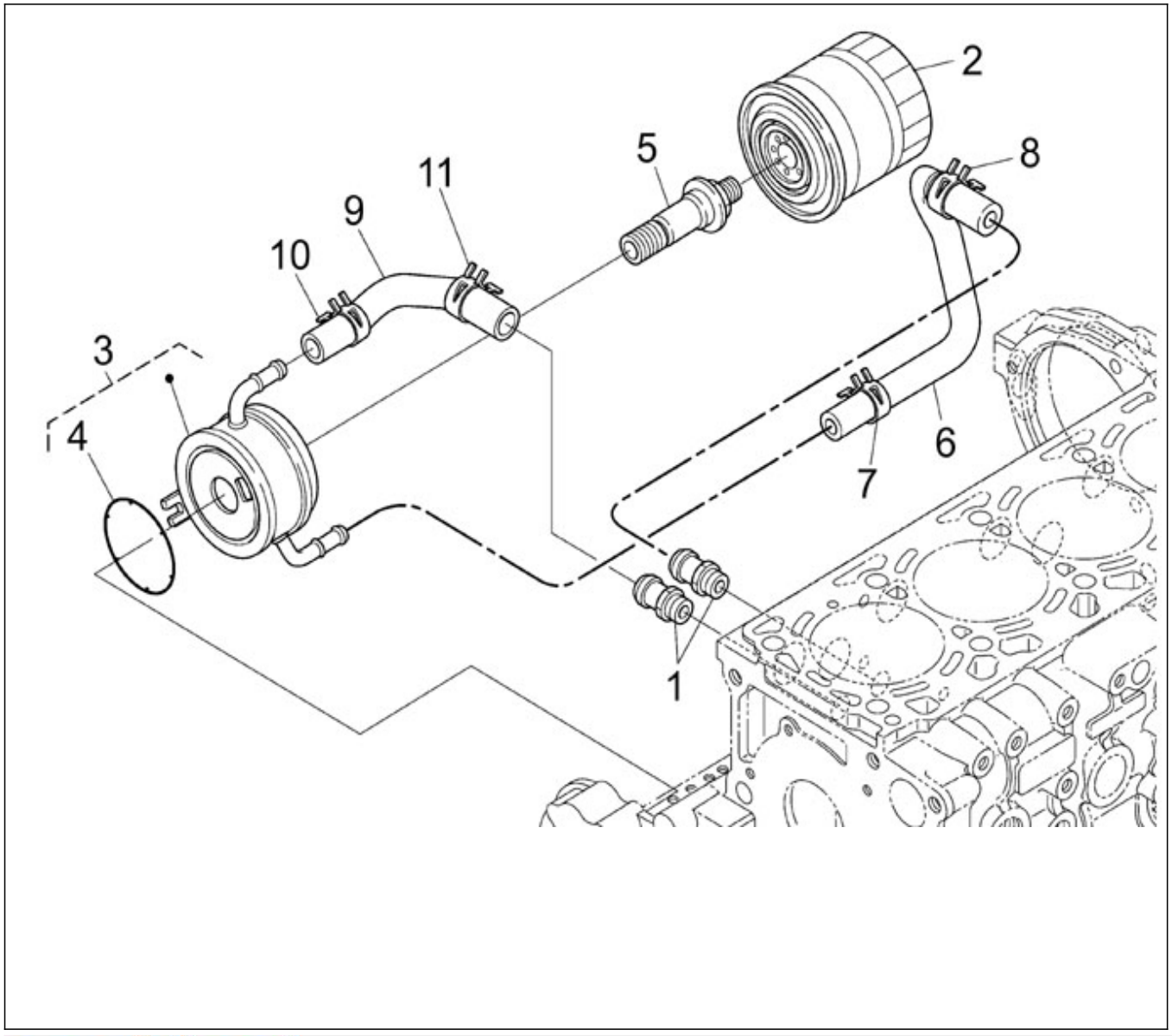

N.	Item	Description	Qty	Notes
1	970313525	GASKET,WATER PIPE	2	
2	970314953	CARTRIDGE,OIL FILTER	1	
3	970314935	ASSY COOLER,OIL	1	
4	970314954	O RING	1	
5	970314936	CONNECTOR	1	
6	970314868	PIPE,OIL COOLER	1	
7	970312965	CLAMP,HOSE	1	
8	970310510	CLAMP,HOSE	1	
9	970314907	PIPE,OIL COOLER	1	
10	970312965	CLAMP,HOSE	1	
11	970310510	CLAMP,HOSE	1	

nannidiesel energy in blue

Nanni Industries S.A.S.
Z.I. - B.P. 107 11, Avenue Mariotte 33260 La Teste

Web: http://www.nannidiesel.com
Tel. 33 (0) 5 56 22 30 60
Fax. 33 (0) 5 56 22 30 79

Brand: NanniDiesel

Model: Moteur N4.85 N4.100

Version: Standard

Subassembly: Governor

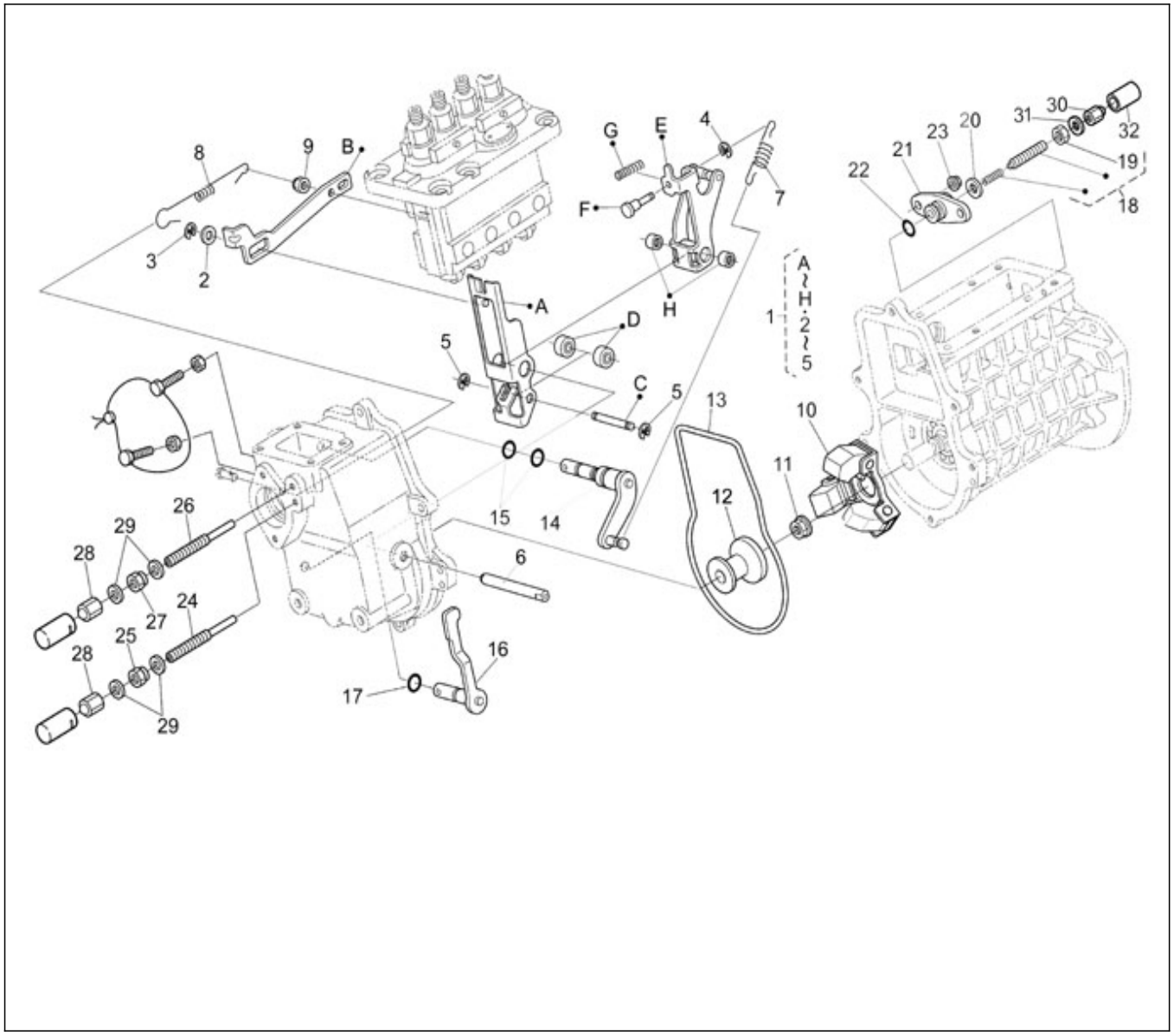

N.	Item	Description	Qty	Notes
1	970314912	ASSY LEVER,FORK	1	
2	970313647	WASHER,PLAIN	1	
3	970313648	CIR CLIP,EXTERNAL	1	
4	970313651	CIR CLIP,EXTERNAL	1	
5	970313650	CIR CLIP,EXTERNAL	2	
6	970310951	SHAFT	1	
7	970314913	SPRING,GOVERNOR	1	
8	970314941	SPRING,START	1	
9	970313657	NUT,LOCK	1	
10	970314940	ASSY WEIGHT,GOVERNOR	1	
11	39460919	NUT, FLANGE	1	
12	970314882	SLEEVE,GOVERNOR	1	
13	970310956	GASKET	1	
14	970314883	ASSY LEVER(GOVERNOR)	1	
15	970313665	O RING	2	
16	970314886	ASSY LEVER,ENG.STOP	1	
17	970313665	O RING	1	
18	970314911	ASSY BOLT,ADJUSTMENT	1	
19	970303906	NUT	1	
20	970491131	WASHER,SEAL	1	
21	970314880	BRACKET,ADJ.BOLT	1	
22	970314794	O RING	1	
23	970313602	NUT,FLANGE (AFTER N°KTE08070398)	2	
24	970314879	BOLT,ADJUSTING	1	
25	970310962	NUT	1	
26	970314879	BOLT,ADJUSTING	1	
27	970310962	NUT	1	
28	970314800	Replaced by 970302839 - NUT (AFTER N°KTE08070398)	2	
29	970150403	RING,SEAL (=> N° XA0001 <= 3Z0001)	4	
30	970307355	NUT,CAP	1	
31	970491131	WASHER,SEAL	1	
32	970302069	CAP	1	

nannidiesel energy in blue

Nanni Industries S.A.

Z.I. - B.P. 107 11, Avenue Mariotte 33260 La Teste

Web: http://www.nannidiesel.com

Tel. 33 (0) 5 56 22 30 60

Fax. 33 (0) 5 56 22 30 79

Brand: NanniDiesel

Model: Moteur N4.85 N4.100

Version: Standard

Subassembly: Fresh water pump

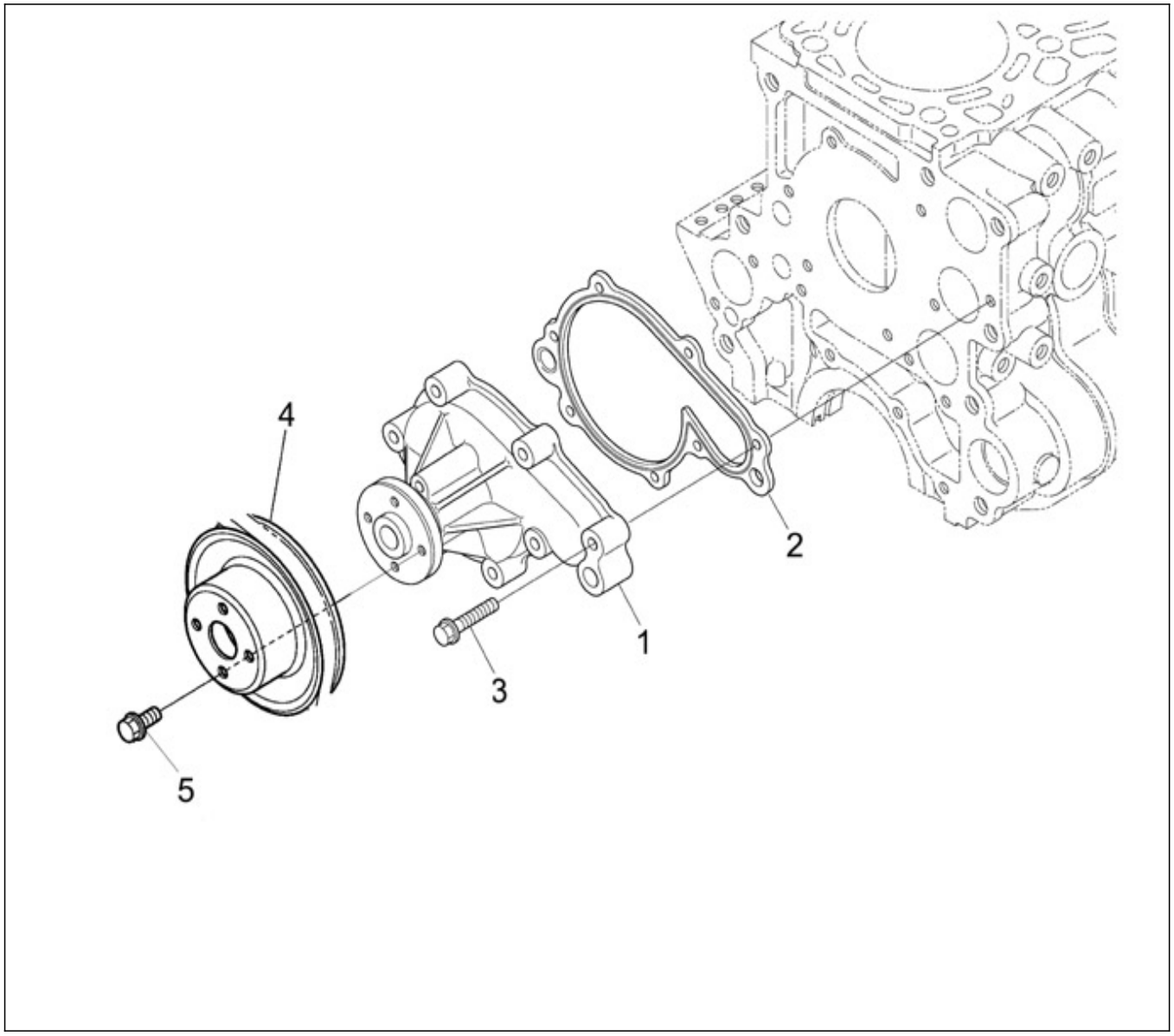

N.	Item	Description	Qty	Notes
1	970314890	ASSY PUMP,WATER	1	
2	970314891	GASKET,WATER PUMP	1	
3	970313705	BOLT,FLANGE	7	
4	970314802	PULLEY,FAN	1	
5	970313085	BOLT,FLANGE	4	

nannidiesel energy in blue

Nanni Industries S.A.S.
Z.I. - B.P. 107 11, Avenue Mariotte 33260 La Teste

Web: http://www.nannidiesel.com
Tel. 33 (0) 5 56 22 30 60
Fax. 33 (0) 5 56 22 30 79

Brand: NanniDiesel

Model: Moteur N4.85 N4.100

Version: Standard

Subassembly: Exhaust elbow

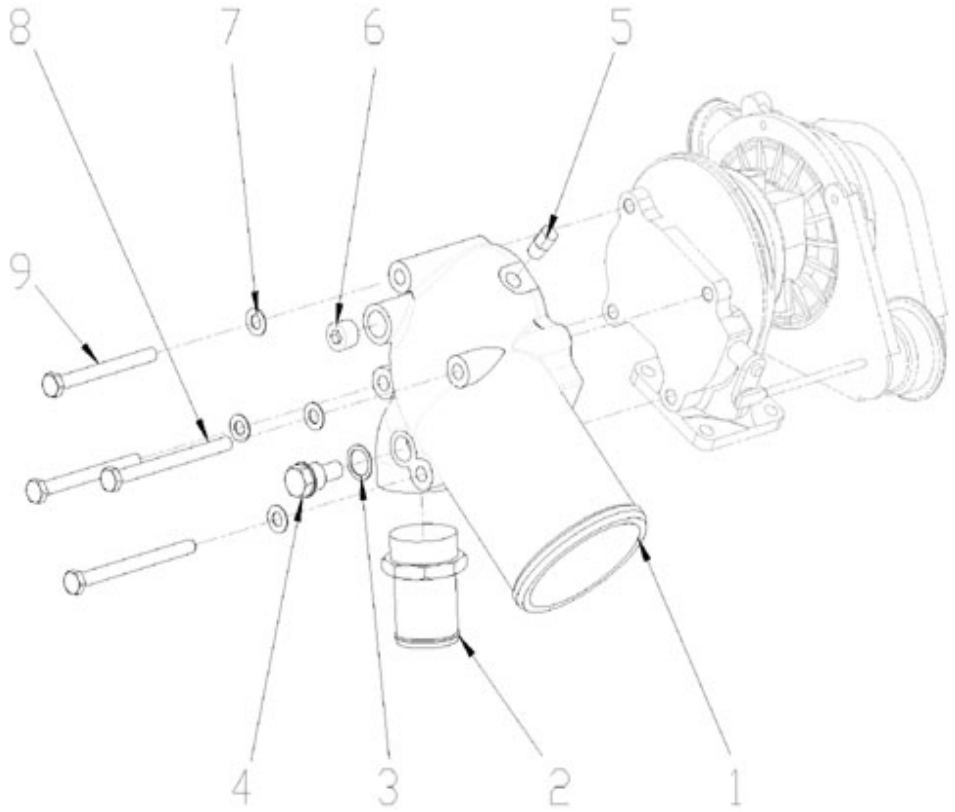

N.	Item	Description	Qty	Notes
1	95200259	ELBOW	1	
2	970892603	BARBED END BRASS FITTING 1 1/4 (QUANTITE 3 R.P. 1	1	
3	970300199	GASKET,RING D16	1	
4	970494635	ANODE,ZINC CPL M16X1,5	1	
5	970307265	PLUG,HEX 1/8	1	
6	970310264	PLUG	1	
7	970119139	WASHER,CORRUGATED D8 (DONT 3 PTO)	4	
8	970300191	BOLT,HEX M 8X100 (+++ FIX COUDE ECHAP)	2	
9	970024025	BOLT,HEX M 8X 85	2	

nannidiesel
energy in blue

Nanni Industries S.A.
Z.I. - B.P. 107 11, Avenue Mariotte 33260 La Teste

Web: http://www.nannidiesel.com
Tel. 33 (0) 5 56 22 30 60
Fax. 33 (0) 5 56 22 30 79

Brand: NanniDiesel

Model: Moteur N4.85 N4.100

Version: Standard

Subassembly: Turbocharger

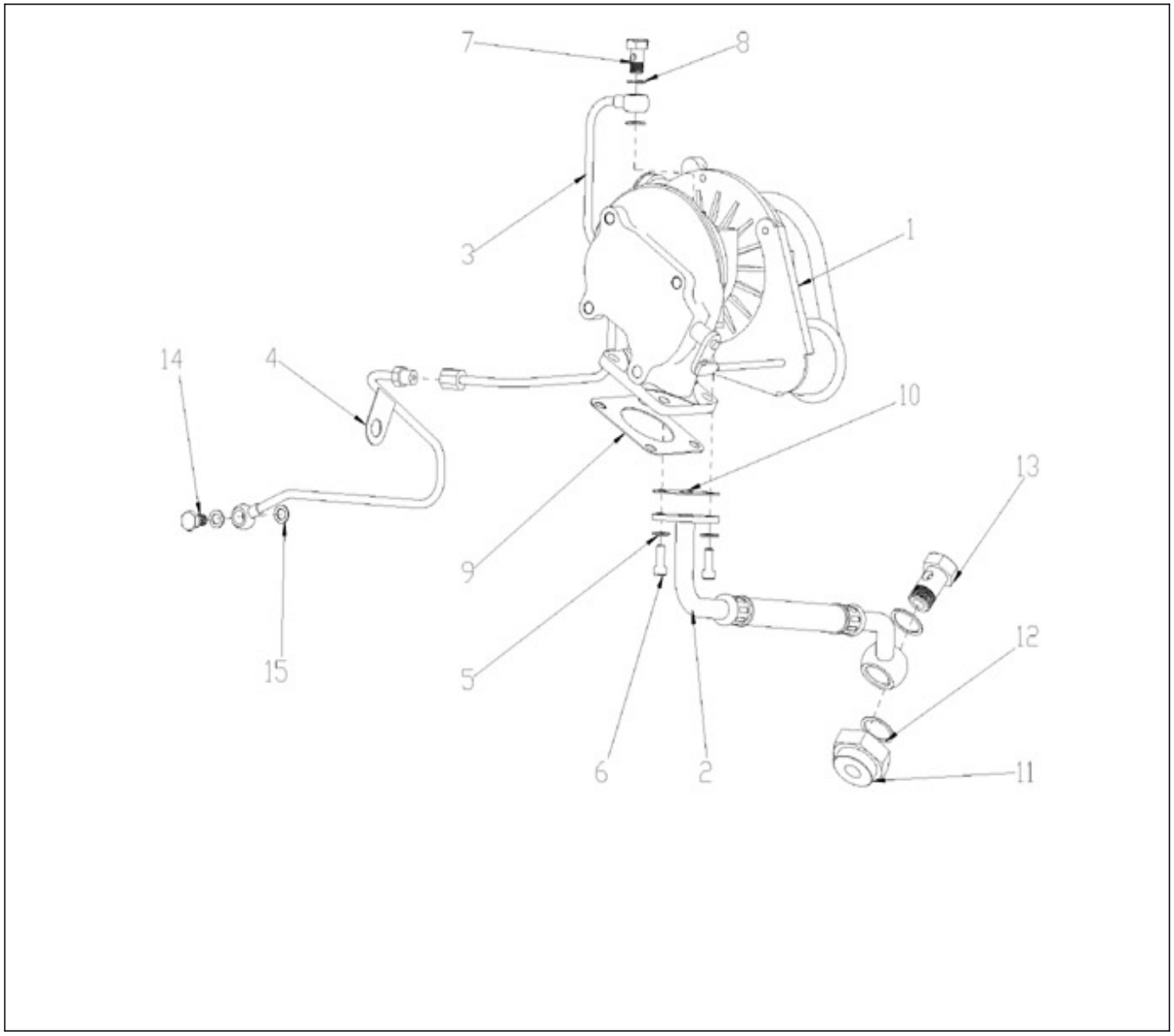

N.	Item	Description	Qty	Notes
1	970314974	ASSY TURBO CHARGER	1	
2	51310014	PIPE	1	
3	51306124	PIPE	1	
4	51306126	PIPE	1	
5	970119149	WASHER, SPRING D 6 (Pour protection injecteur)	2	
6	970164026	BOLT,SOCK M 6X 16	2	
7	970315044	BOLT	1	
8	970300430	GASKET,RING D10 (+++ FIX TUYAU GRAISSAGE SUR	2	
9	970314340	GASKET,MUFFLER	1	
10	970310508	GASKET NA (A vérifier livraison avec base moteur)	1	
11	48300427	REDUCTION MAL 1P X FEM 1/2P	1	
12	48100940	GASKET	2	
13	48300429	HOLLOW SCREW	1	
14	48100945	HOLLOW SCREW	1	
15	970314807	GASKET	1	

nannidiesel energy in blue

Nanni Industries S.A.
Z.I. - B.P. 107 11, Avenue Mariotte 33260 La Teste

Web: http://www.nannidiesel.com
Tel. 33 (0) 5 56 22 30 60
Fax. 33 (0) 5 56 22 30 79

Brand: NanniDiesel

Model: Moteur N4.85 N4.100

Version: Standard

Subassembly: Heat exchanger

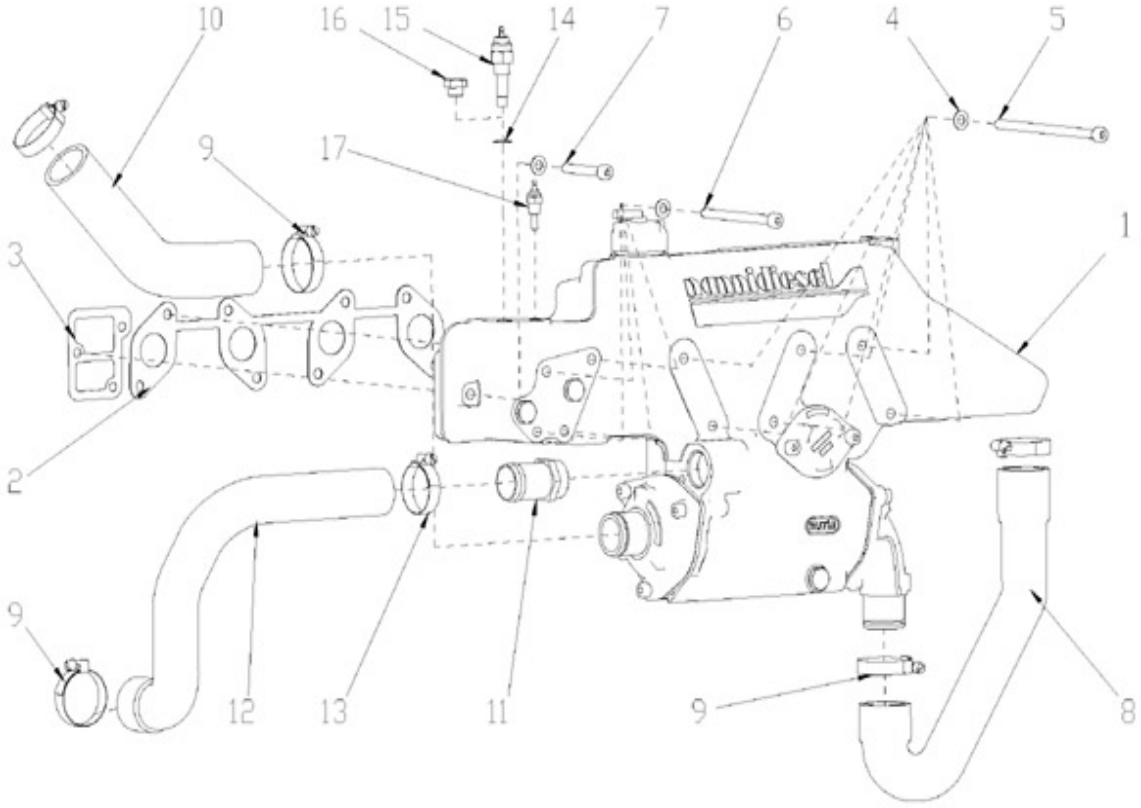

N.	Item	Description	Qty	Notes
1	48300419	HEAT EXCHANGER KEEL COOLING	1	
2	970314973	GASKET,EX-MANIFOLD	1	
3	48438184	GASKET	1	
4	970119139	WASHER,CORRUGATED D8 (DONT 3 PTO)	10	
5	39129433	BOLT	6	
6	39160927	BOLT	4	
7	39129431	BOLT	1	
8	48328161	HOSE	1	
9	970604533	CLAMP,HOSE 32-44 (QUANTITE 8 R.P. 4 LE 19/06/2008)	5	
10	48328162	HOSE	1	
11	48505153	UNION (REMPLACE LE D25 LE 21/08/06)	1	
12	48328174	HOSE	1	
13	970300922	CLAMP,HOSE 26-38 (FOURNITURE POMPE ATTELEE)	1	
14	970300306	GASKET,RING D14 (SUR REFROID THERMO MOTA)	1	
15	970851602	WATER TEMPERATURE SENDER	1	
16	970875506	PLUG (<= N°KT08090422)	1	
17	970304054	TEMPERATURE SWITCH 1/8 1P 97¦C	1	

nannidiesel energy in blue

Nanni Industries S.A.S.
Z.I. - B.P. 107 11, Avenue Mariotte 33260 La Teste

Web: http://www.nannidiesel.com
Tel. 33 (0) 5 56 22 30 60
Fax. 33 (0) 5 56 22 30 79

Brand: NanniDiesel

Model: Moteur N4.85 N4.100

Version: Standard

Subassembly: Heat exch N4.85

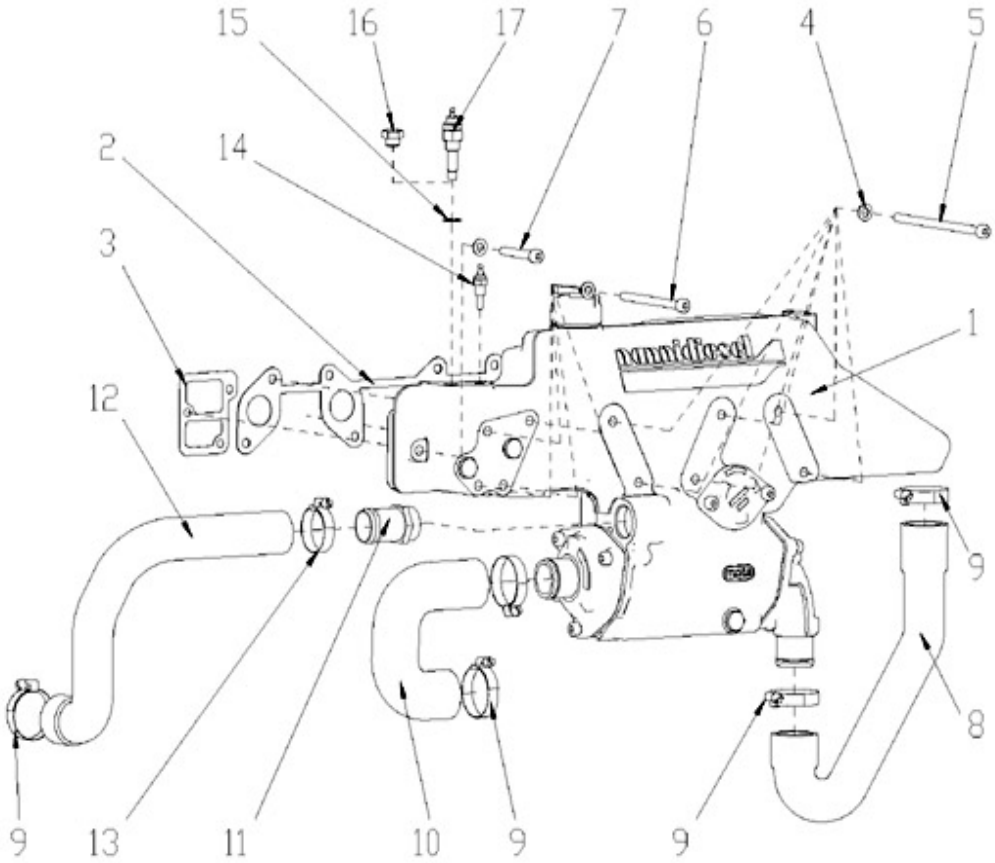

N.	Item	Description	Qty	Notes
1	48300419	HEAT EXCHANGER KEEL COOLING	1	
2	970314973	GASKET,EX-MANIFOLD	1	
3	48438184	GASKET	1	
4	970119139	WASHER,CORRUGATED D8 (DONT 3 PTO)	10	
5	39129433	BOLT	6	
6	39160927	BOLT	4	
7	39129431	BOLT	1	
8	48328161	HOSE	1	
9	970604533	CLAMP,HOSE 32-44 (QUANTITE 8 R.P. 4 LE 19/06/2008)	5	
10	48328198	HOSE	1	
11	48505153	UNION (REMPLACE LE D25 LE 21/08/06)	1	
12	48328174	HOSE	1	
13	970300922	CLAMP,HOSE 26-38 (FOURNITURE POMPE ATTELEE)	1	
14	970300306	GASKET,RING D14 (SUR REFROID THERMO MOTA)	1	
15	970851602	WATER TEMPERATURE SENDER	1	
16	970875506	PLUG (<= N°KT08090422)	1	
17	970304054	TEMPERATURE SWITCH 1/8 1P 97¦C	1	

nannidiesel energy in blue

Nanni Industries S.A.S.
Z.I. - B.P. 107 11, Avenue Mariotte 33260 La Teste

Web: http://www.nannidiesel.com
Tel. 33 (0) 5 56 22 30 60
Fax. 33 (0) 5 56 22 30 79

Brand: NanniDiesel

Model: Moteur N4.85 N4.100

Version: Standard

Subassembly: Seawater pump Assy

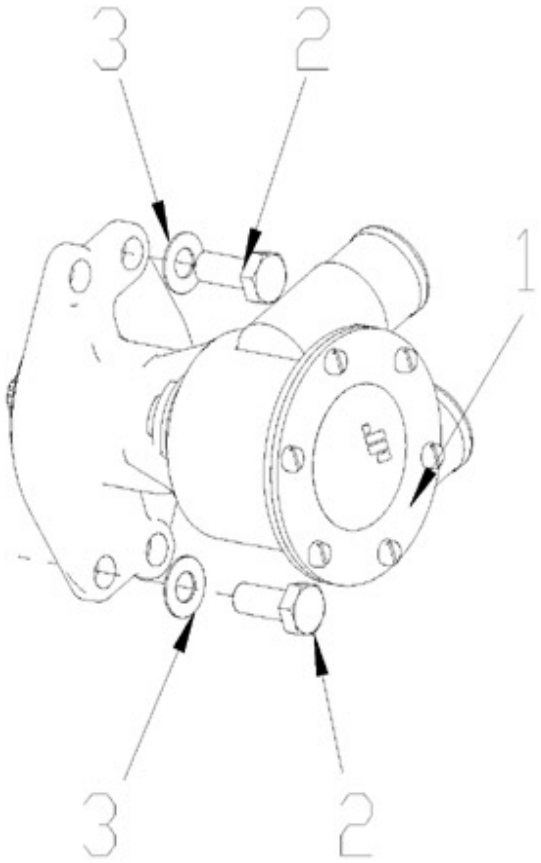

N.	Item	Description	Qty	Notes
1	970313318	WATER PUMP	1	
2	970300044	BOLT,HEX M10X1,25X 25 (+++ FIX . SUPPORT)	2	
3	970119137	WASHER,CORRUGATED D10	2	

nannidiesel
energy in blue

Nanni Industries S.A.S.
Z.I. - B.P. 107 11, Avenue Mariotte 33260 La Teste

Web: http://www.nannidiesel.com
Tel. 33 (0) 5 56 22 30 60
Fax. 33 (0) 5 56 22 30 79

Brand: NanniDiesel

Model: Moteur N4.85 N4.100

Version: Standard

Subassembly: Seawater pump

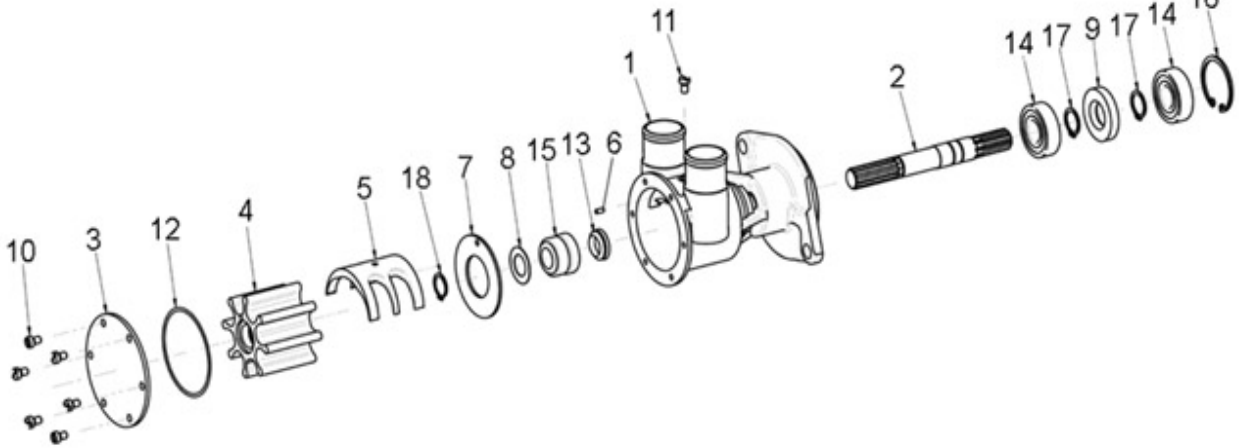

N.	Item	Description	Qty	Notes
1	970314977	CORP POMPE EAU DE MER N4.85 N4.100	1	
2	970314978	ARBRE DE POMPE EAU DE MER N4.85 N4.100	1	
3	970313122	COVER	1	
4	970544310	IMPELLER,WATER PUMP F 7B-803	1	
5	970313139	CAM,WATER PUMP	1	
6	970303675	PIN,WATER PUMP F5B-9000	1	
7	970313125	SPACER	1	
8	970313128	WASHER,WATER PUMP	1	
9	970314780	VALVE, INLET	1	
10	970312429	SCREW	6	
11	970304048	SCREW,CAM WATER PUMP	1	
12	970313123	GASKET	1	
13	970313130	LIP SEAL	1	
14	970312426	BALL BEARING	2	
15	970313129	GASKET	1	
18	970313127	CIRCLIPS	1	

nannidiesel energy in blue

Nanni Industries S.A.
Z.I. - B.P. 107 11, Avenue Mariotte 33260 La Teste

Web: http://www.nannidiesel.com
Tel. 33 (0) 5 56 22 30 60
Fax. 33 (0) 5 56 22 30 79

Brand: NanniDiesel

Model: Moteur N4.85 N4.100

Version: Standard

Subassembly: Intake manifold

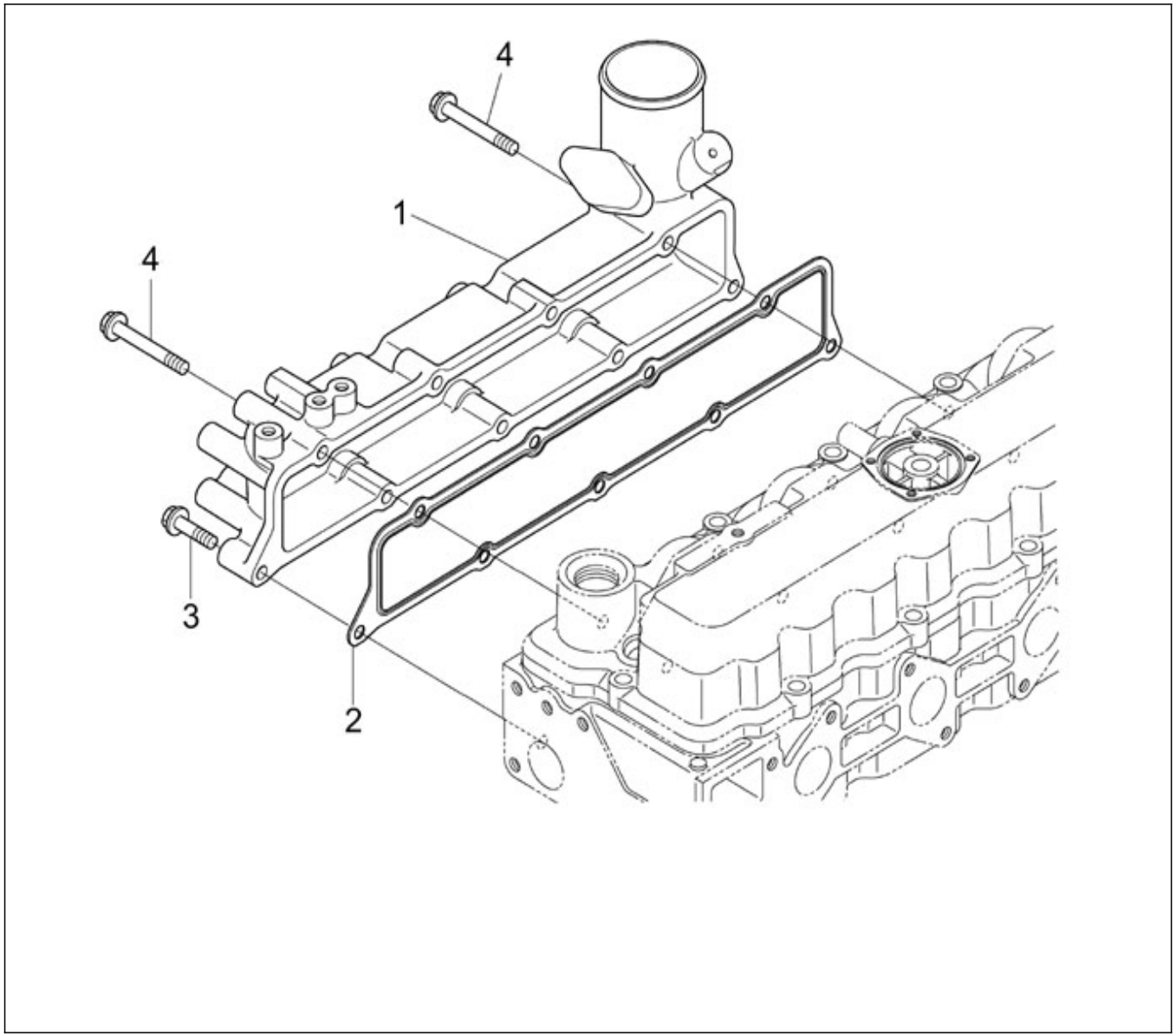

N.	Item	Description	Qty	Notes
1	970314898	MANIFOLD,INLET	1	
2	970314813	GASKET,IN-MANIFOLD	1	
3	970313705	BOLT,FLANGE	7	
4	970314789	BOLT,FLANGE	2	

nannidiesel energy in blue

Nanni Industries S.A.S.
Z.I. - B.P. 107 11, Avenue Mariotte 33260 La Teste

Web: http://www.nannidiesel.com
Tel. 33 (0) 5 56 22 30 60
Fax. 33 (0) 5 56 22 30 79

Brand: NanniDiesel

Model: Moteur N4.85 N4.100

Version: Standard

Subassembly: Intercooler

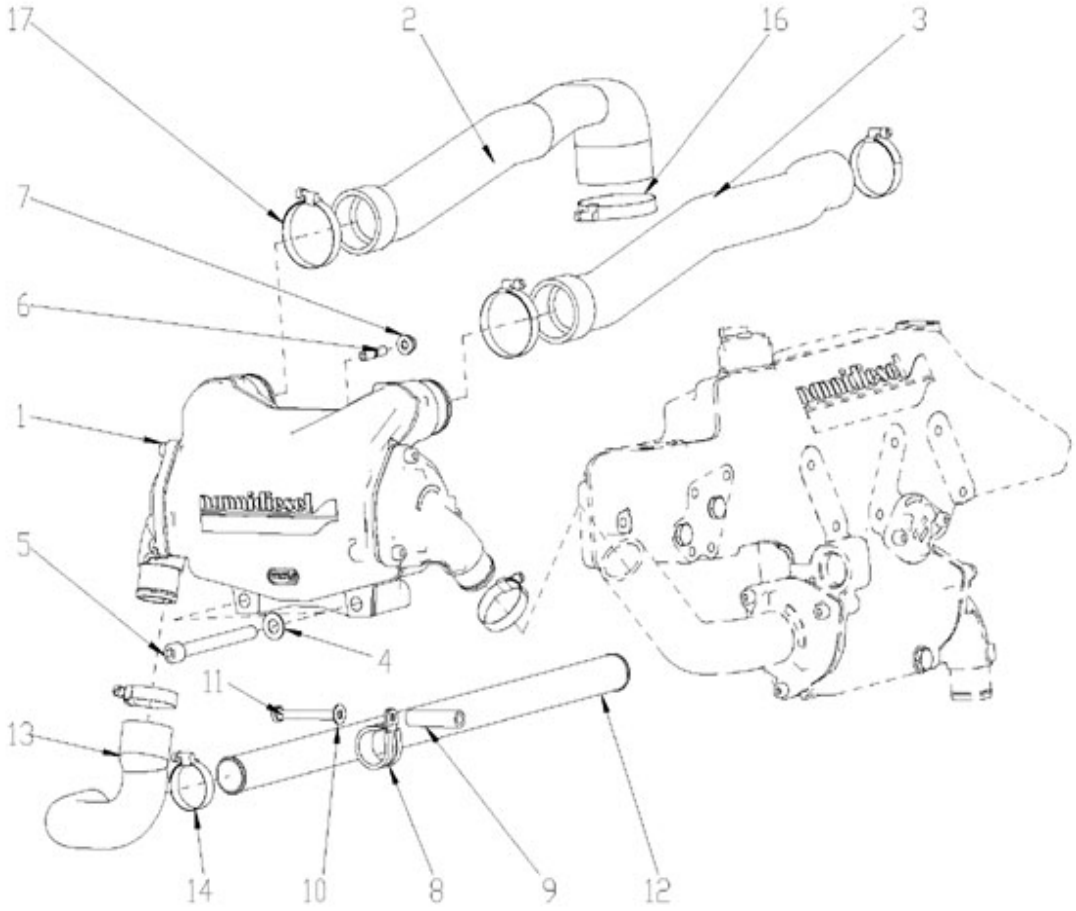

N.	Item	Description	Qty	Notes
1	48300420	INTERCOOLER	1	
2	48328165	HOSE	1	
3	48328163	HOSE	1	
4	39129515	BOLT	2	
5	970647606	WASHER,CORRUGATED D12 (POUR POULIE DP 240	2	
6	970300057	STUD,M 8X 20 (+++FIX TURBO)	1	
7	39460916	NUT (+++FIX ECHANGEUR)	1	
8	48100944	CLAMP	1	
9	95312377	SPACER	1	
10	970027323	WASHER,PLAIN D 8	1	
11	970300193	BOLT,HEX M 8X 70 (+++FIX TENDEUR)	1	
12	32399010	PIPE	1	
13	48328171	HOSE	1	
14	970300922	CLAMP,HOSE 26-38 (FOURNITURE POMPE ATTELEE)	1	
15	970604533	CLAMP,HOSE 32-44 (QUANTITE 8 R.P. 4 LE 19/06/2008)	3	
16	970634620	CLAMP,HOSE 60-80	1	
16	970634621	CLAMP,HOSE	2	

nannidiesel energy in blue

Nanni Industries S.A.S.
Z.I. - B.P. 107 11, Avenue Mariotte 33260 La Teste

Web: http://www.nannidiesel.com
Tel. 33 (0) 5 56 22 30 60
Fax. 33 (0) 5 56 22 30 79

Brand: NanniDiesel

Model: Moteur N4.85 N4.100

Version: Standard

Subassembly: Oil extraction

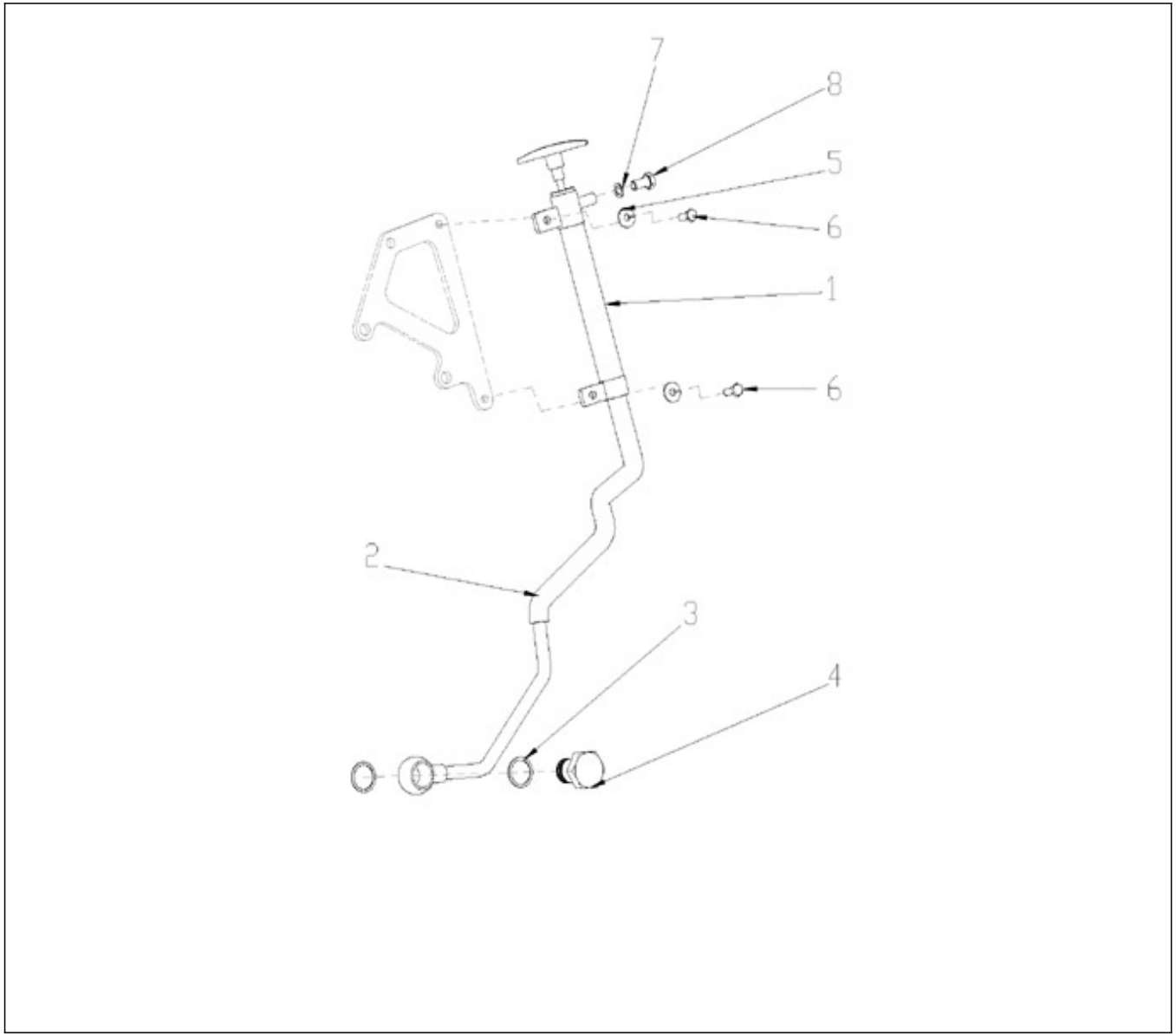

N.	Item	Description	Qty	Notes
1	970439302	PUMP,OIL EXTRACTION	1	
2	51310008	PIPE	1	
3	970307489	GASKET	2	
4	43360111	HOLLOW SCREW	1	
5	970119149	WASHER, SPRING D 6 (Pour protection injecteur)	2	
6	970439910	BOLT,HEX M 6X 16 (+++FIX.SUPPORT AG ACC)	2	
7	970300288	GASKET,M8 (FIX TUYAU GRAISSAGE)	1	
8	970832061	BOLT	1	

nannidiesel energy in blue

Nanni Industries S.A.
Z.I. - B.P. 107 11, Avenue Mariotte 33260 La Teste

Web: http://www.nannidiesel.com
Tel. 33 (0) 5 56 22 30 60
Fax. 33 (0) 5 56 22 30 79

Brand: NanniDiesel

Model: Moteur N4.85 N4.100

Version: Standard

Subassembly: Starter motor

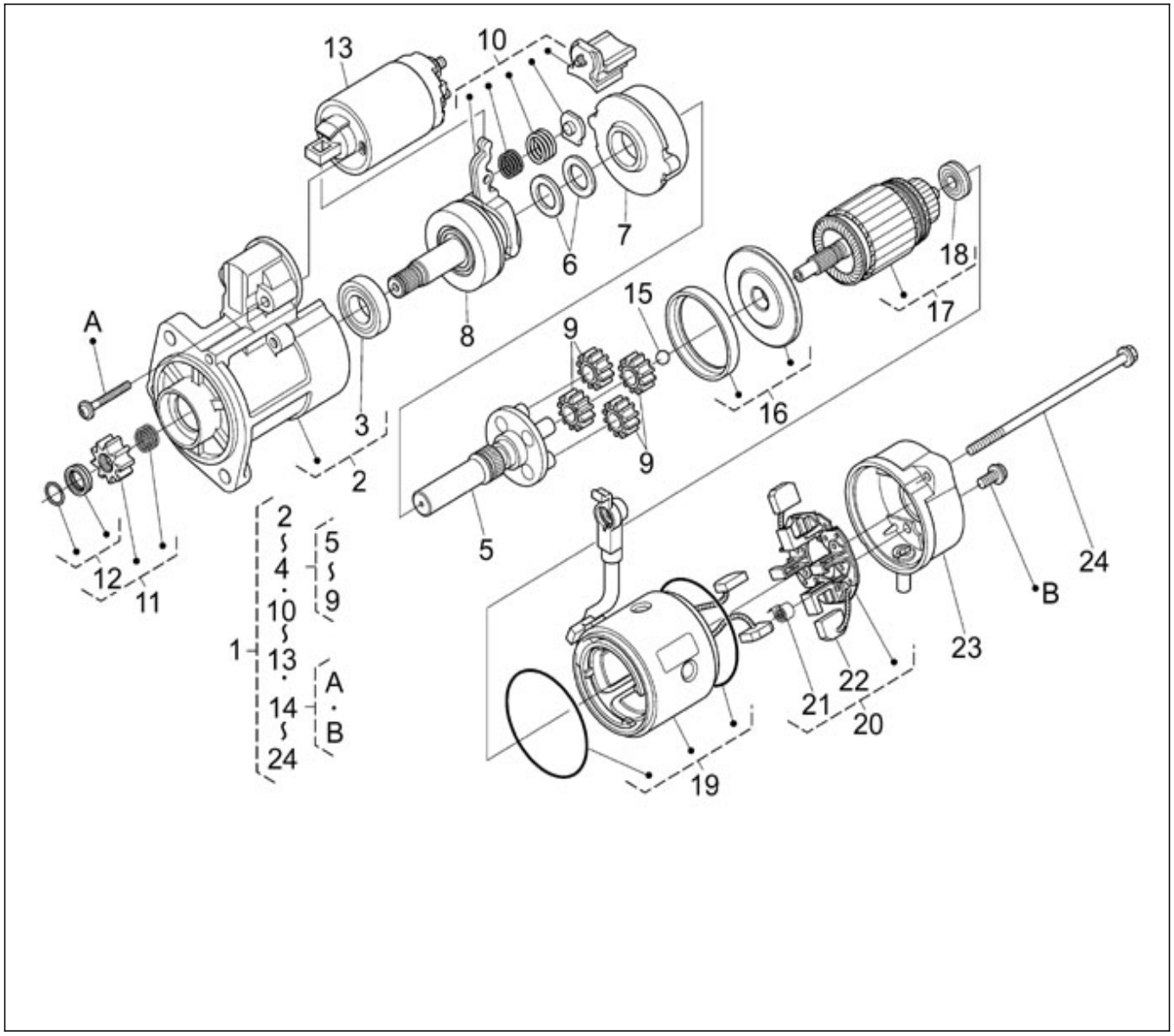

N.	Item	Description	Qty	Notes
1	970314943	ASSY STARTER	1	
2	970314944	ASSY BRACKET,FRONT	1	
3	970310971	BEARING	1	
4	970313679	ASSY SHAFT,CLUTCH	1	
5	970313680	ASSY SHAFT,GEAR	1	
6	970310974	SET WASHER	1	
7	970310975	SET GEAR	1	
8	970310976	CLUTCH,OVERRANNING	1	
9	970310977	ASSY GEAR	4	
10	970313681	ASSY LEVER,SET	4	
11	970313682	SET PINION	1	
12	970310980	SET STOPPER	1	
13	970310981	HOLDER,MAGNETIC SWITCH	1	
14	970313683	SET, SCREW	1	
15	970310983	BALL	1	
16	970310984	SET PACKING	1	
17	970313684	ASSY ARMATURE	1	
18	970310986	BEARING	1	
19	970314945	ASSY YOKE	1	
20	970313686	ASSY HOLDER,BRUSH	1	
21	970313687	BRUSH,SPRING	4	
22	970313688	BRUSH	2	
23	970314946	ASSY BRACKET,REAR	1	
24	970313690	SET,BOLT	1	

nannidiesel energy in blue

Nanni Industries S.A.S.

Z.I. - B.P. 107 11, Avenue Mariotte 33260 La Teste

Web: http://www.nannidiesel.com

Tel. 33 (0) 5 56 22 30 60

Fax. 33 (0) 5 56 22 30 79

Brand: NanniDiesel

Model: Moteur N4.85 N4.100

Version: Standard

Subassembly: Starter motor

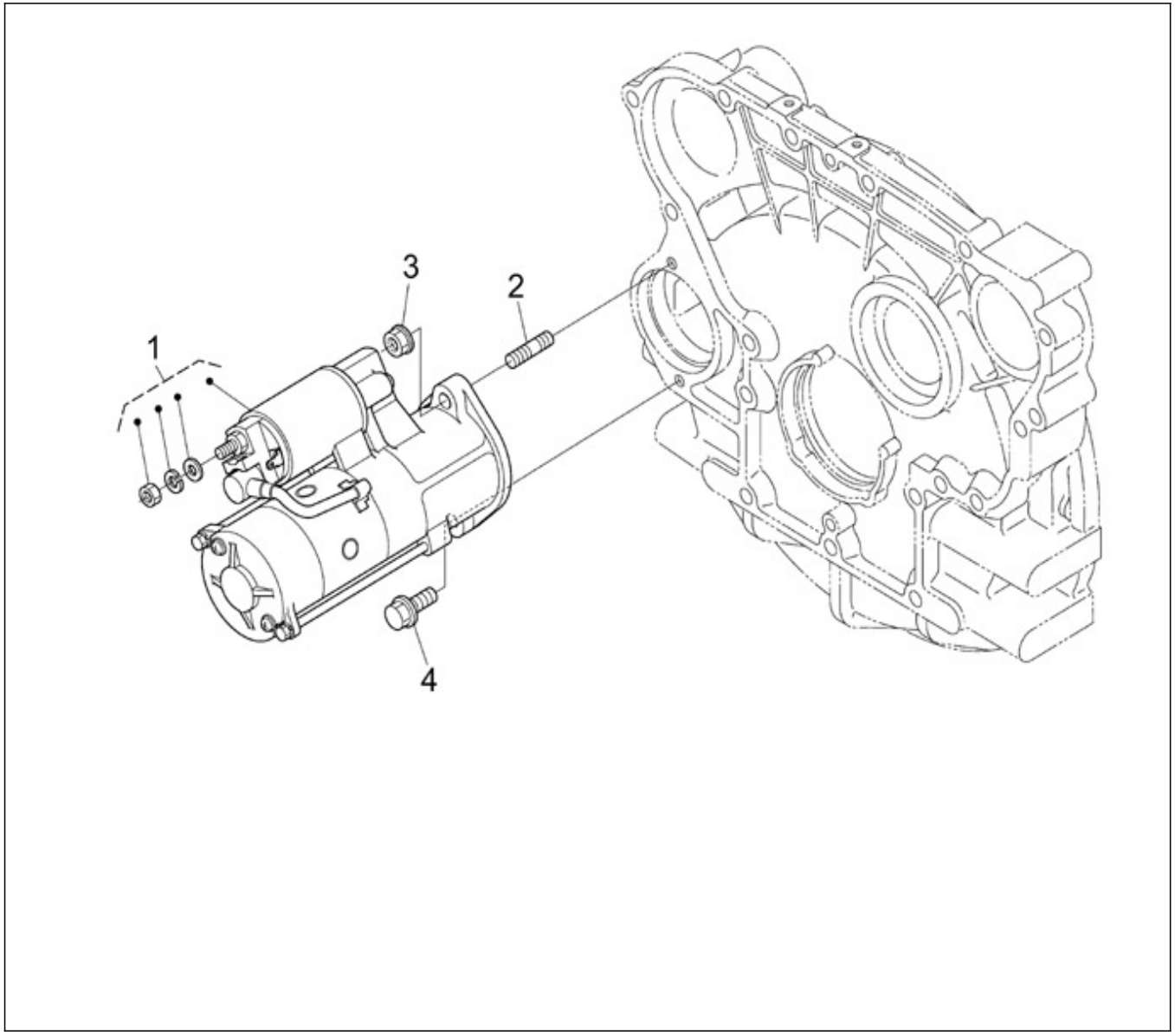

N.	Item	Description	Qty	Notes
1	970314943	ASSY STARTER	1	
2	970313675	STUD	1	
3	39460917	NUT,FLANGE	1	
4	970313674	BOLT,FLANGE	1	

nannidiesel energy in blue

Nanni Industries S.A.S.
Z.I. - B.P. 107 11, Avenue Mariotte 33260 La Teste

Web: http://www.nannidiesel.com
Tel. 33 (0) 5 56 22 30 60
Fax. 33 (0) 5 56 22 30 79

Brand: NanniDiesel

Model: Moteur N4.85 N4.100

Version: Standard

Subassembly: Alternator

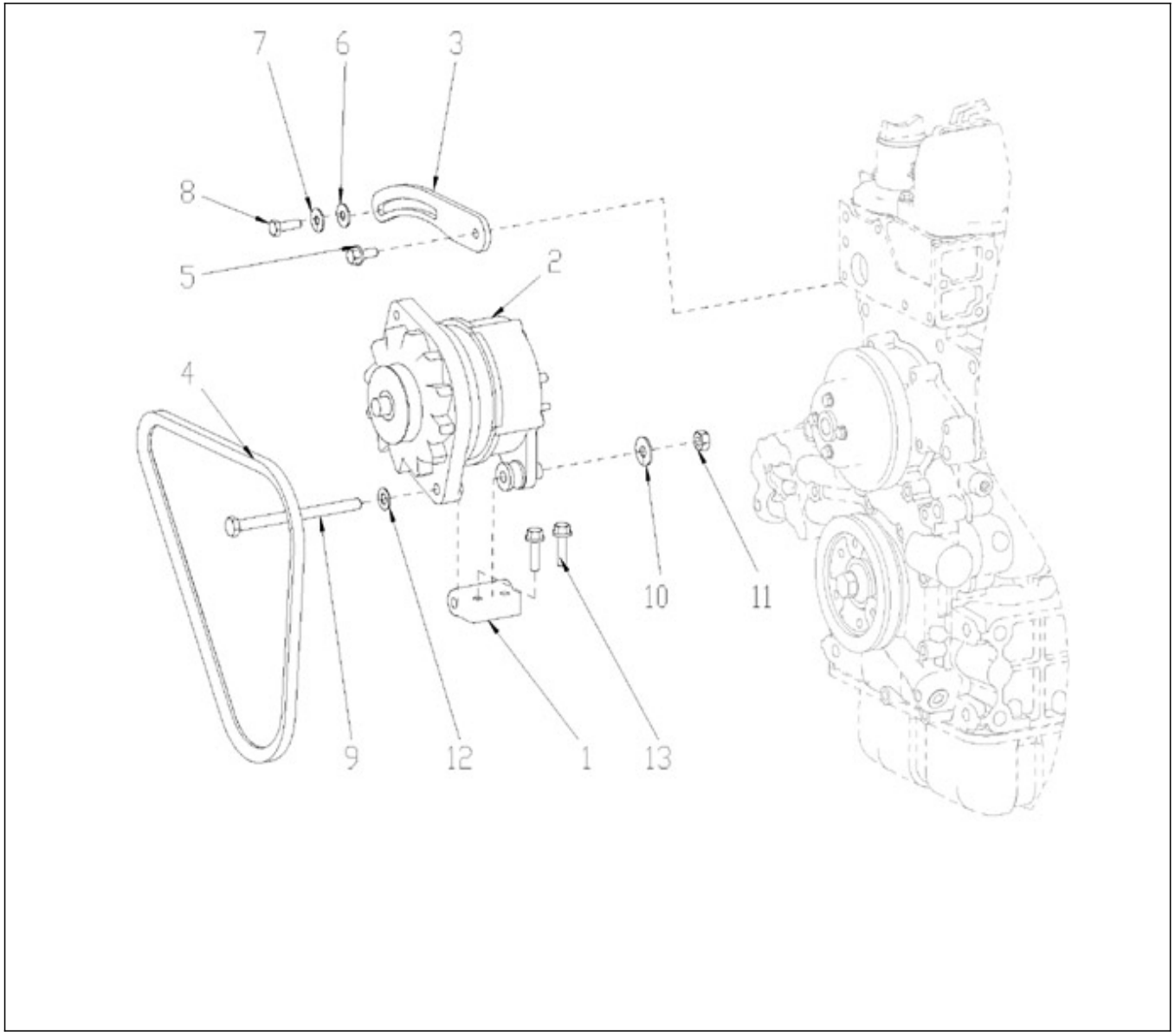

N.	Item	Description	Qty	Notes
1	970314976	ALTERNATOR BRAKET	1	
2	48201171	ALTERNATOR	1	
3	95310883	TIGHTNER	1	
4	48108036	BELT	1	
5	39160662	BOLT	1	
6	970304050	WASHER	1	
7	970119138	WASHER,SPRING D 8 (TENDEUR)	1	
8	970409603	BOLT,HEX M 8X 25 (FIX SUP ALT)	1	
9	39160666	BOLT	1	
10	970119136	WASHER,SPRING D10 (POUR INVERSEUR)	1	
11	970119143	NUT, M10	1	
12	970119137	WASHER,CORRUGATED D10	1	
13	39160639	BOLT	2	

nannidiesel
energy in blue

Nanni Industries S.A.S.
Z.I. - B.P. 107 11, Avenue Mariotte 33260 La Teste

Web: http://www.nannidiesel.com
Tel. 33 (0) 5 56 22 30 60
Fax. 33 (0) 5 56 22 30 79

Brand: NanniDiesel

Model: Moteur N4.85 N4.100

Version: Standard

Subassembly: Electric stop

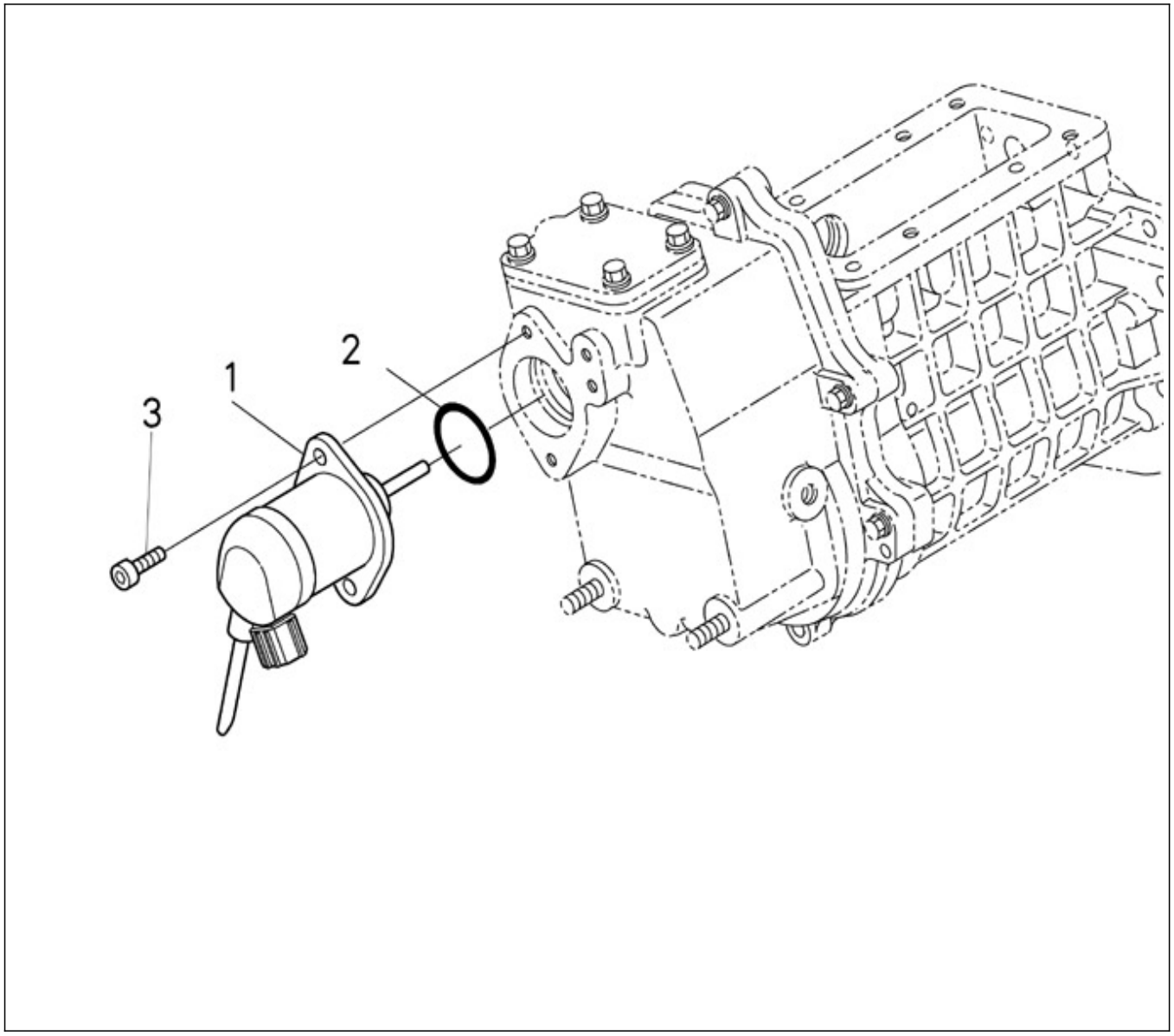

N.	Item	Description	Qty	Notes
1	970314777	ASSY STOP SOLENOID (BASE S/N <= 8V9999)	1	BASE S/N <= 8V9999
1	970315151	SOLENOID (BASE S/N >= 8W0001)	1	BASE S/N >= 8W0001
2	970313108	O RING	1	
3	970313344	BOLT,HEX-SOC-HD	2	

nannidiesel energy in blue

Nanni Industries S.A.
Z.I. - B.P. 107 11, Avenue Mariotte 33260 La Teste

Web: http://www.nannidiesel.com
Tel. 33 (0) 5 56 22 30 60
Fax. 33 (0) 5 56 22 30 79

Brand: NanniDiesel

Model: Moteur N4.85 N4.100

Version: Standard

Subassembly: Flywheel housing

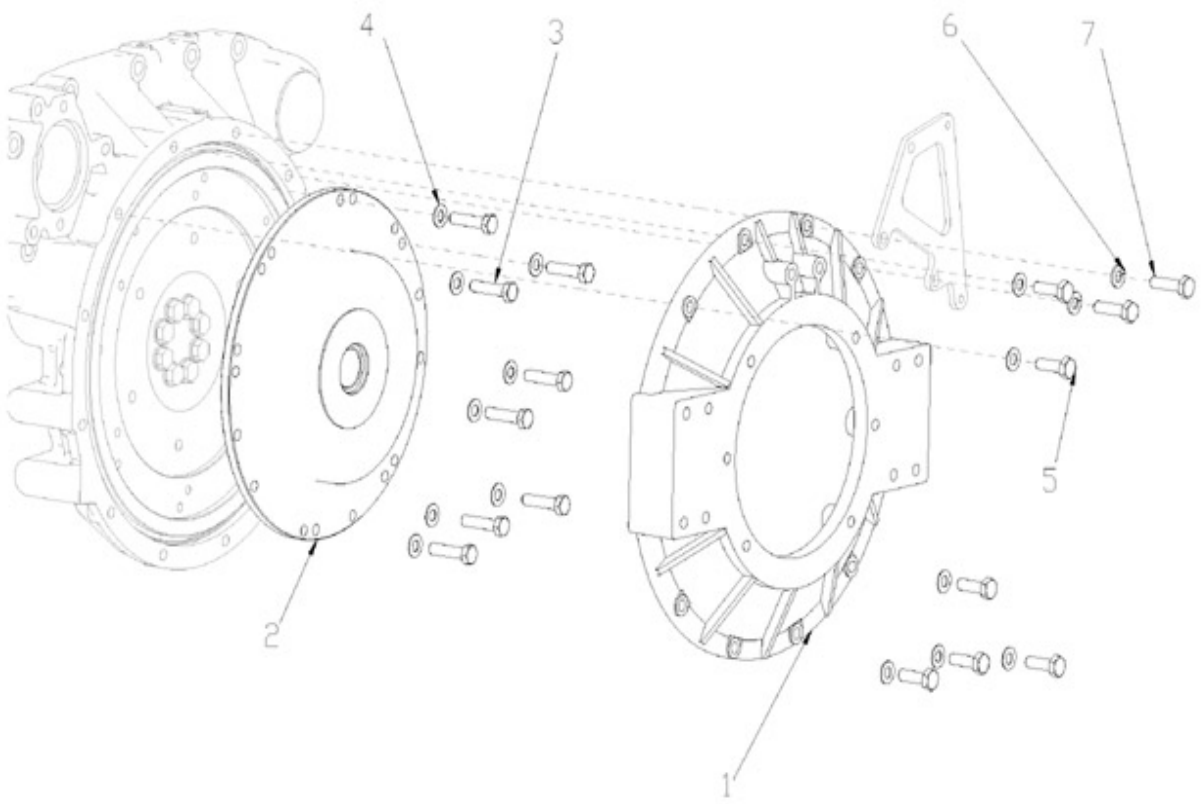

N.	Item	Description	Qty	Notes
1	95200226	HOUSING	1	
2	48100934	DAMPER TORFLEX 630	1	
3	39160463	BOLT,HEX M10X1,25X 25	8	
4	970119137	WASHER,CORRUGATED D10	14	
5	970499051	BOLT,HEX M10X1,25X 30 (+++ FIX . PTO)	6	
6	970119136	WASHER,SPRING D10 (POUR INVERSEUR)	2	
7	970304013	BOLT,HEX M10X1.25X 35 (+++FIX . SUPPORT D)	2	

nannidiesel
energy in blue

Nanni Industries S.A.S.
Z.I. - B.P. 107 11, Avenue Mariotte 33260 La Teste

Web: http://www.nannidiesel.com
Tel. 33 (0) 5 56 22 30 60
Fax. 33 (0) 5 56 22 30 79

Brand: NanniDiesel

Model: Moteur N4.85 N4.100

Version: Standard

Subassembly: Oil cooler gear box

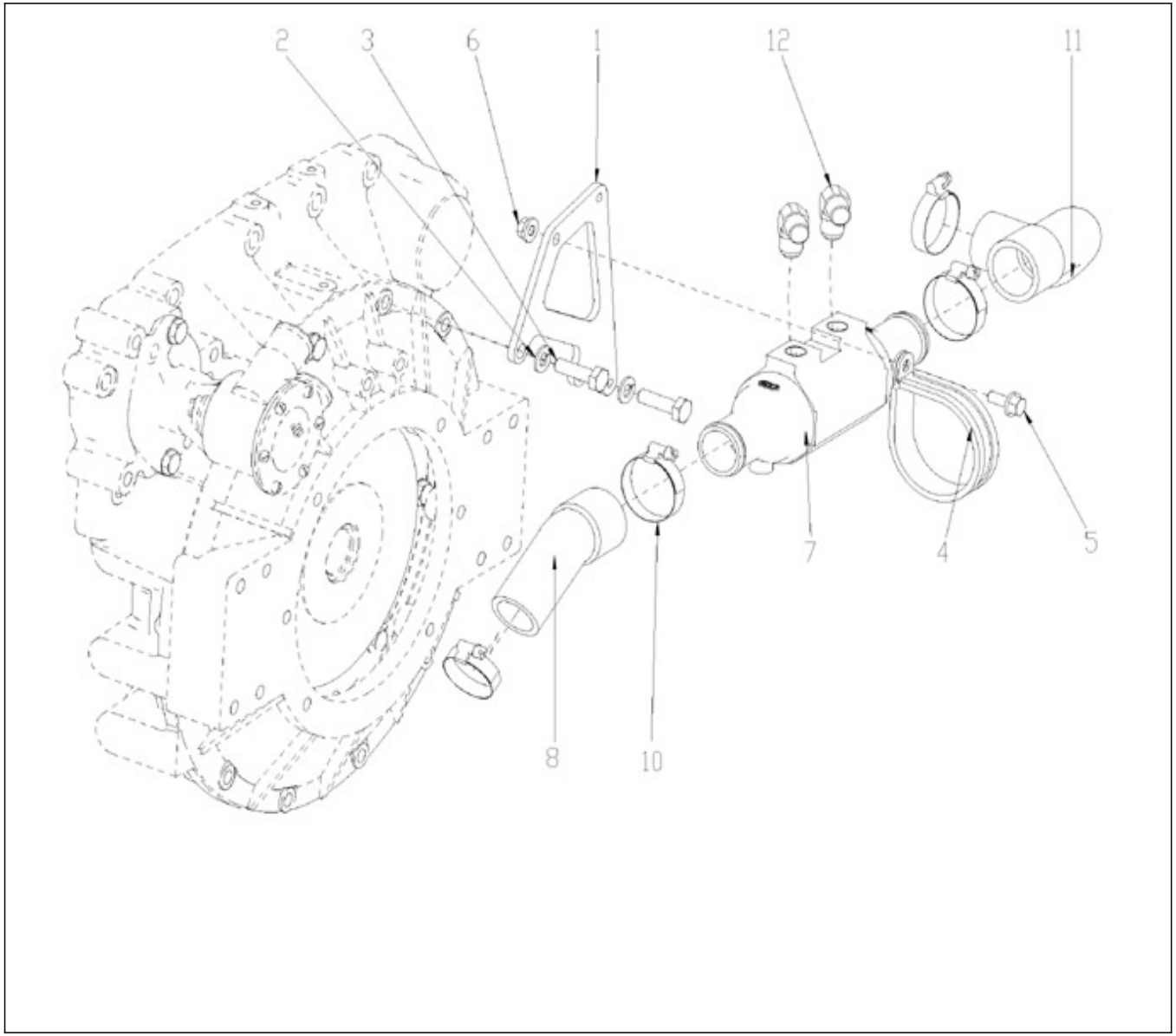

N.	Item	Description	Qty	Notes
1	95310778	BRACKET	1	
2	970119136	WASHER,SPRING D10 (POUR INVERSEUR)	2	
3	970304013	BOLT,HEX M10X1.25X 35 (+++FIX . SUPPORT D)	2	
4	48100880	CLAMP	1	
5	39160662	BOLT	1	
6	39460916	NUT (+++FIX ECHANGEUR)	1	
7	48300385	FUEL COOLER (REFROID HUILE)	1	
8	48328167	HOSE	1	
10	970604533	CLAMP,HOSE 32-44 (QUANTITE 8 R.P. 4 LE 19/06/2008)	2	
11	48328166	HOSE	1	
12	48300339	COUDE 90D JIC 3/4-3/8 BSP (++Mettre en bourriche)	2	

nannidiesel energy in blue

Nanni Industries S.A.S.
Z.I. - B.P. 107 11, Avenue Mariotte 33260 La Teste

Web: http://www.nannidiesel.com
Tel. 33 (0) 5 56 22 30 60
Fax. 33 (0) 5 56 22 30 79

Brand: NanniDiesel

Model: Moteur N4.85 N4.100

Version: Standard

Subassembly: Oil cooler gear box N4.85

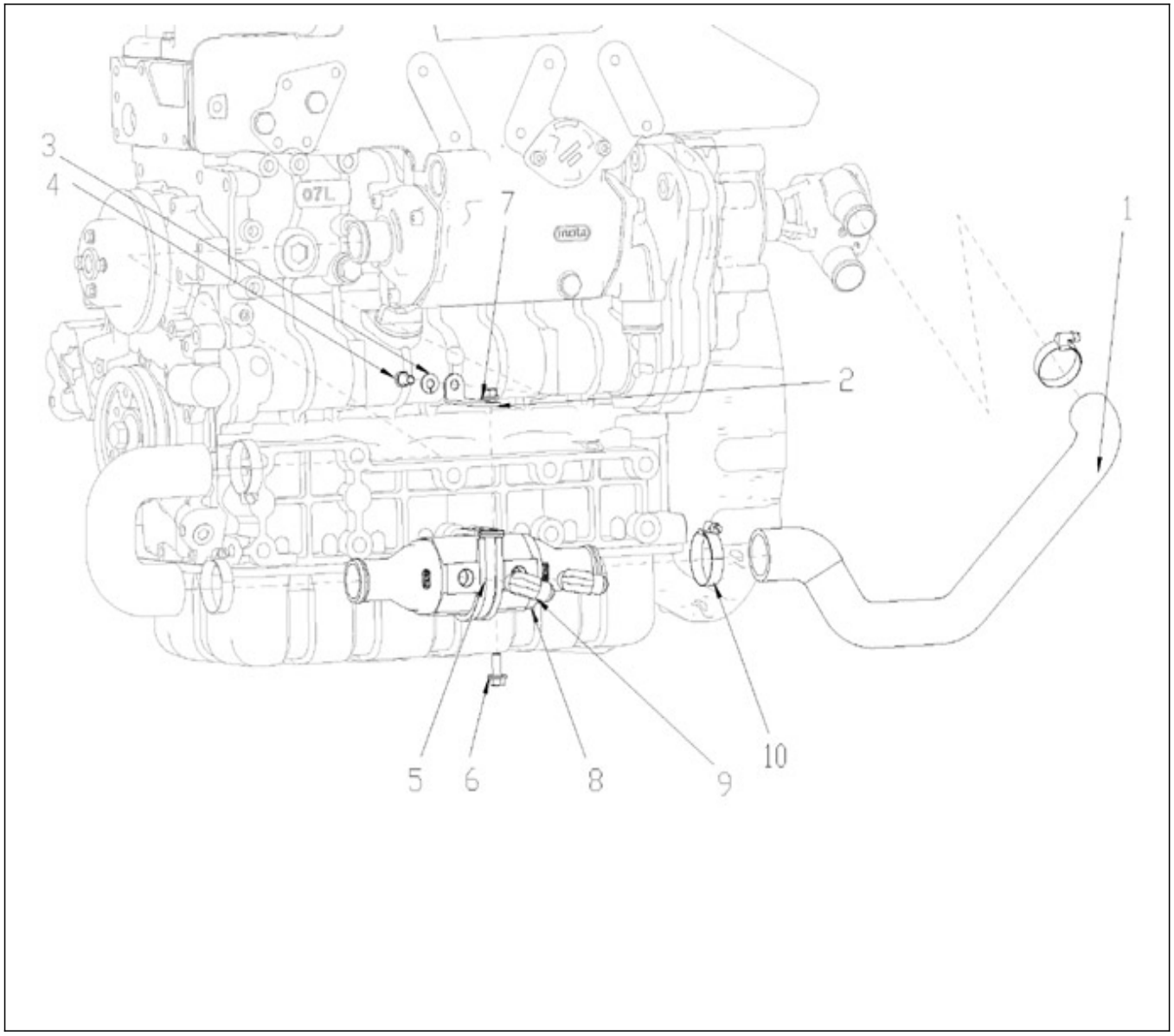

N.	Item	Description	Qty	Notes
1	48328197	HOSE	1	
2	95303428	BRACKET	1	
3	970119138	WASHER,SPRING D 8 (TENDEUR)	1	
4	970639903	BOLT,HEX M 8X 16 (+++FIX SUPPORT ET WASTEGATE)	1	
5	48100880	CLAMP	1	
6	39160662	BOLT	1	
7	39460916	NUT (+++FIX ECHANGEUR)	1	
8	48300385	FUEL COOLER (REFROID HUILE)	1	
9	48300339	COUDE 90D JIC 3/4-3/8 BSP (++Mettre en bourriche)	2	
10	970604533	CLAMP,HOSE 32-44 (QUANTITE 8 R.P. 4 LE 19/06/2008)	1	

nannidiesel energy in blue

Nanni Industries S.A.S.
Z.I. - B.P. 107 11, Avenue Mariotte 33260 La Teste

Web: http://www.nannidiesel.com
Tel. 33 (0) 5 56 22 30 60
Fax. 33 (0) 5 56 22 30 79

Brand: NanniDiesel

Model: Moteur N4.85 N4.100

Version: Standard

Subassembly: Engine mount

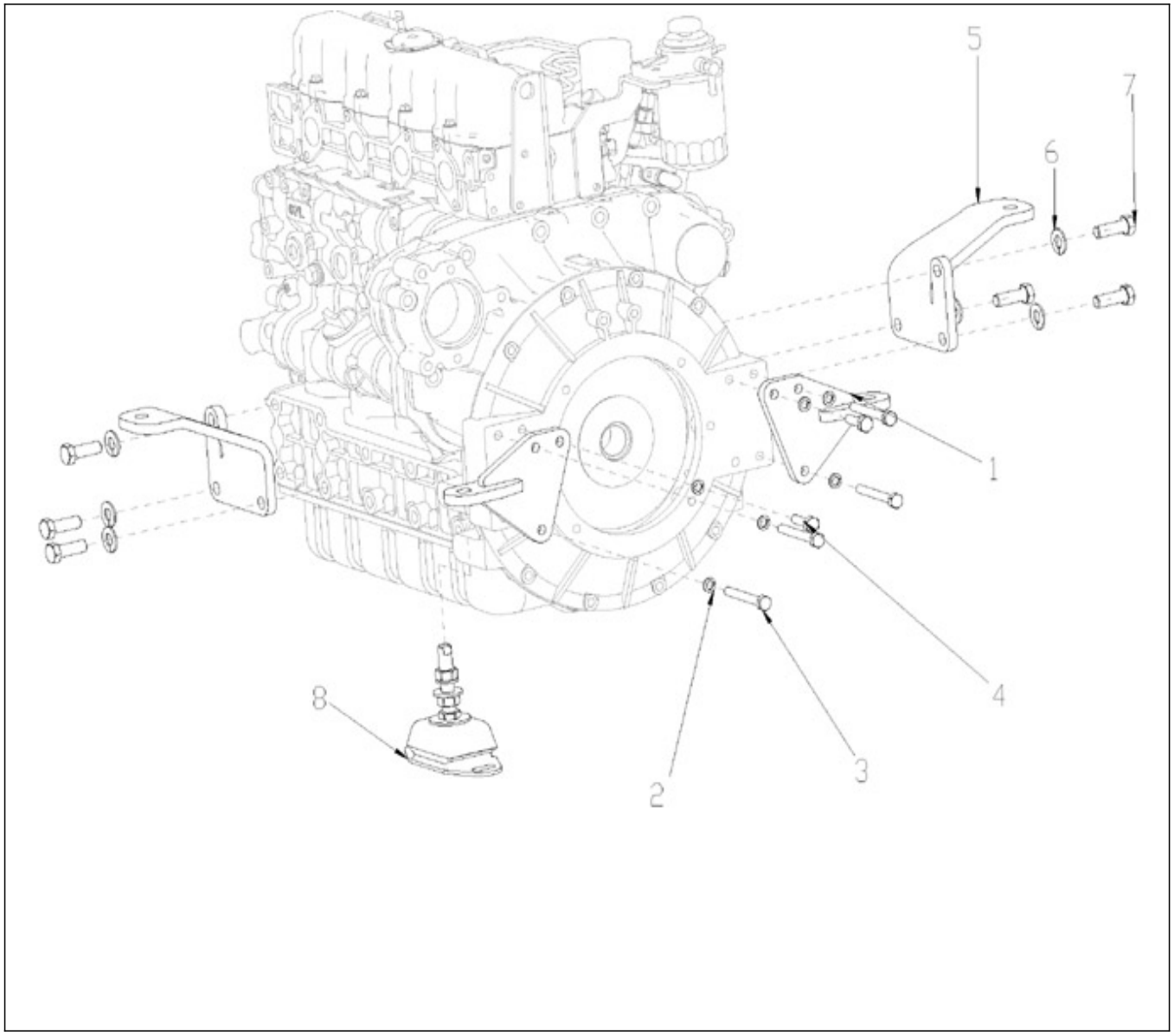

N.	Item	Description	Qty	Notes
1	95310781	BRACKET	2	
2	970119136	WASHER,SPRING D10 (POUR INVERSEUR)	6	
3	39160462	BOLT (+++ FIX . SUPPORT)	4	
4	970644008	BOLT,HEX M10X 35 (+++POUR MONTAGE FLASQUE)	2	
5	95310779	BRACKET	2	
6	970649112	WASHER,SPRING D14	6	
7	39160930	BOLT	6	
8	970311184	MOUNT RUBBER (AVANT)	2	

nannidiesel energy in blue

Nanni Industries S.A.S.
Z.I. - B.P. 107 11, Avenue Mariotte 33260 La Teste

Web: http://www.nannidiesel.com
Tel. 33 (0) 5 56 22 30 60
Fax. 33 (0) 5 56 22 30 79