T4.260-3

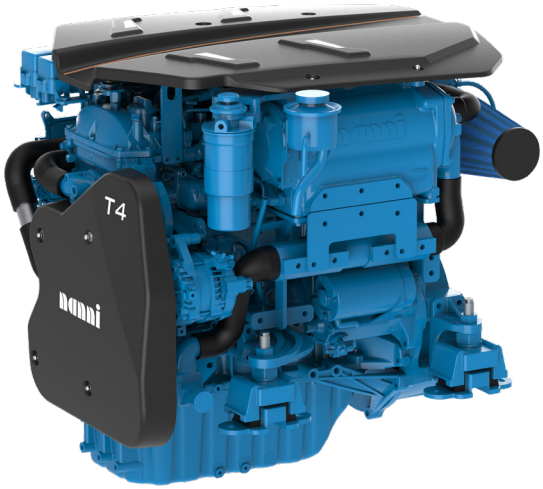

Power at crankshaft	191 kW [260 hp]
Displacement	2.755 l [168 in³]
Configuration	4 cylinders in line
Operation type	4 strokes Diesel
Bore & Stroke	92 x 103,6 mm [3.62 x 4.07 in]
Compression ratio	15.6 : 1
Rated speed	3800 rpm
Idling speed	700 rpm
Peak torque	577.7 Nm
Peak torque speed	2000-3000 rpm
Engine base	Toyota
Fuel system	Direct injection Common Rail Electronically controlled
Air intake	Turbocharged with intercooler
Cooling	Closed cooling with heat exchanger
Max mounting angle	7° Front down 7° Front up
Alternator	12 Volt 130 Amp
Rating	M6
Emission compliance	IMO II Annex VI Compliant RCD 2013/53/EU EPA marine Tier 3 BSO2
Dry weight	334 kg [736.3 lbs]

Engine block
- 4 valves per cylinder
- Dual overhead camshaft (DOHC)
- Watercooled exhaust manifold
- Internal balancers

Fuel system
- Common Rail injection system
- Fuel filter with hand primer
- Integrated fuel cooler

Lubrication System
- Replacable full-flow oil filter
- Oil dipstick
- Transmission oil cooler

Cooling system
- Closed cooling with heat exchanger
- Belt driven self-priming raw water pump
- Coolant circulating pump
- Water cooled exhaust elbow

Electrical system & instrumentation
- 12 V / 130 A alternator
- 12 V Electrical system
- Complete instrumentation including key switch & alarms
- Extension cable harness with plug-in connection

Air intake
- Turbocharger
- Intercooler

Other features
- Flexible engine mountings

Optional equipments & accessories
- Complete marine propulsion systems
- Marine transmission adaptation kits
- Throttle and shift controls
- Additionnal instrumentation, Flying bridge extension harness
- Water boiler systems
- Complete fuel systems
- Complete exhaust systems
- Trolling valve
- Switchable Turbine Fuel Prefilter
- Exhaust Muffler & Connections
- Sea water Circuit Kit

Command Panel SI-5
- Engine RPM
- Oil Pressure
- Water Temperature
- Engine Hours
- Trim Indicator
- Fuel Level
- Nmea 2000
- J1939 CAN BUS

ISO 9001
BUREAU VERITAS
Certification

Transmission

- ZF68

For other transmission requests, please contact technical support.

Stern drive

- Bravo X One
- Bravo X Three
- Bravo X Two

LUBRICATION SYSTEM

Oil pressure @ idle speed	bar	1
	psi	7.3
Oil pressure @ rated speed	bar	4.5
	psi	65.3
Oil quantity excluding filter @ 0° angle	liters	7.5
	gal US	1.98
Maximum permitted installed tilt angle	front down	°7
	front up	°7
Maximum permitted intermittent angle	tilt	°15
	side tilt	°7

PERFORMANCE

RPM @ cranckshaft	rpm	700	1400	2000	2600	3200	3600	3800	4000
Torque @ cranckshaft	Nm	216.9	298.1	577.7	577.4	548.8	495.8	470.2	397.3
	ft-lb	160	219.9	426.1	426.1	404.8	365.7	346.8	293
Power @ cranckshaft	hp	21.6	59.4	164.5	213.7	250	254.1	254.4	226.2
	Kw	15.9	43.7	121	157.2	183.9	186.9	187.1	166.4
Power at calculated propeller load exp.3	hp	2	12.9	37.9	83.2	155	220.9	255	-
	Kw	1.5	9.5	27.9	61.2	114.1	162.5	187.1	-

FUEL SYSTEM

RPM @ cranckshaft	rpm	700	1400	2000	2600	3200	3600	3800	4000
Fuel consumption propeller load exp.3	l/h	1	2.65	7.75	17,03	31.76	45.22	52	-
	gal US/h	0.26	0.70	2.04	4.49	8.39	11.94	13.73	-
Fuel consumption at full load	l/h	5	12	32	41	49	52	52	-
	gal US/h	1.3	3.2	8.5	10.8	12.95	13.7	13.7	
Maximum permitted fuel inlet pressure	kPa	-30 / +20							
	psi	-4.4 / +2.9							
Maximum permitted fuel return pressure	kPa	20							
	psi	2.9							

COOLING SYSTEM

Coolant circulation pump flow	l/min	160
	gal US/min	42.2
Raw water pump flow	l/min	155
	gal US/min	40.9
Total heat rejection at rated speed	kW	124
	BTU/min	-
Total coolant capacity	l	15
	gal US	3.96
Thermostat, start open at	°C	80
	°F	176
Thermostat, fully open at	°C	94
	°F	201

EXHAUST SYSTEM

Exhaust gas flow	m³/min	41.06
	ft³/min	1450
Permitted back pressure in the exhaust line	kPa	20
	inH_2O	120.4
Maximum exhaust temperature	°C	550
	°F	1022

AIR INTAKE SYSTEM

Engine air consumption at 25°C	m³/min	12.4
	ft³/min	437
Maximum allowance intake air temperature	°C	50
	°F	122
Maximum temperature rise, ambient to engine inlet	°C	20
	°F	68
Maximum air intake restriction, clean air filter	kPa	3
	inH_2O	12
Maximum air intake restriction, durty air filter	kPa	6.25
	inH_2O	25.1
Boost pressure	kPa	170-175
	psi	24.6 / 25.3

ELECTRICAL SYSTEM

Alternator	voltage	V	12
	amperes	A	130
Electric starter motor	kW		2.2
Battery, minimum cold start current	CCA		650 min
Recommanded batterie K20	A/h		100 to 120

DRY WEIGHT

Weight without transmission	kg	334
	lbs	736.3
Dry weight with TTM40A	kg	404
	lbs	890.6

INSTALLATION TIPS

Fuel line supply diameter	mm	10
	in	0.39
Fuel line return diameter	mm	10
	in	0.39
Sea water line diameter	mm	38
	in	1.5
Exhaust line diameter	mm	104
	in	4.1

RATINGS

Rating	M6
Operating hours	Up to 500 annual operating hours
Load Factor	Up to 35 %
Duty Cycle	Full power for no more than 30 minutes out of each 8 hours of operation. The remaining operation time must be at or below cruising speed.

T4.260-3

191 kW [260 hp]

PROPULSION ENGINE

PERFORMANCE CURVES

Power at crankshaft

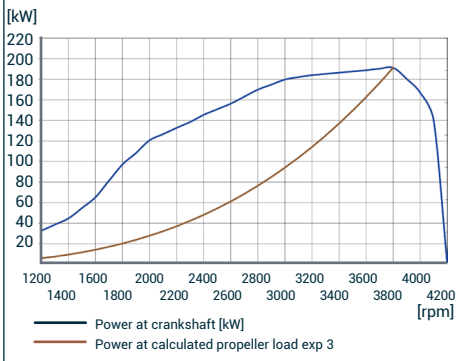

Torque at crankshaft

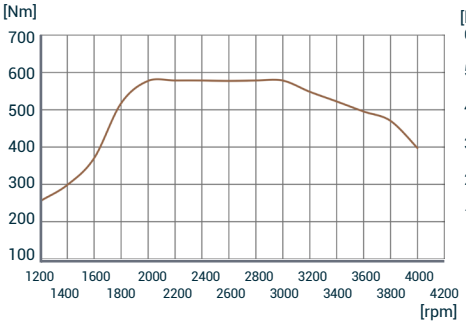

Fuel consumption @ exp3

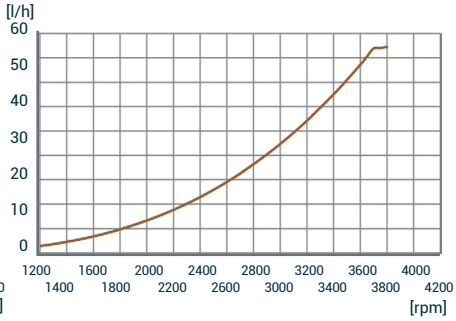

DIMENSIONS BOBTAIL

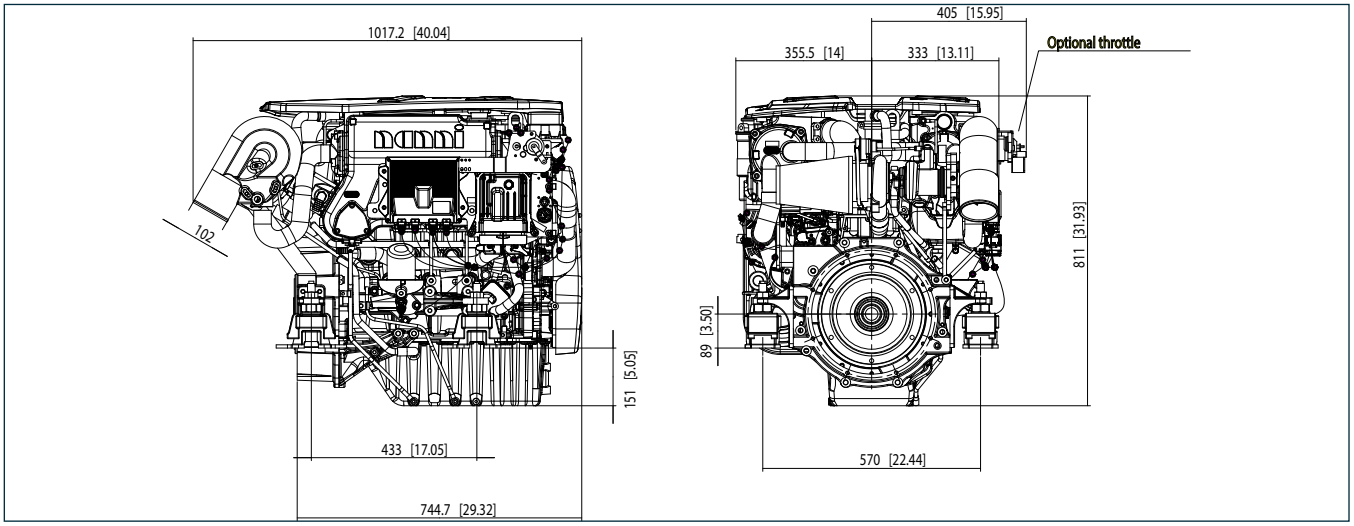

DIMENSIONS SHAFT LINE

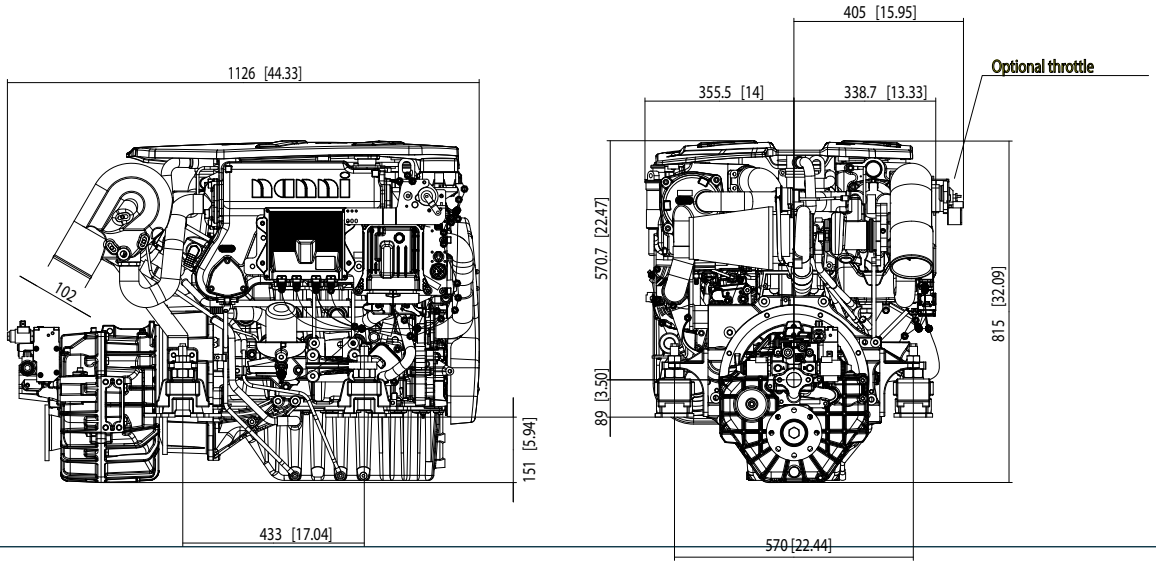

T4.260-3

191 kW [260 hp]

DIMENSIONS STERN DRIVE

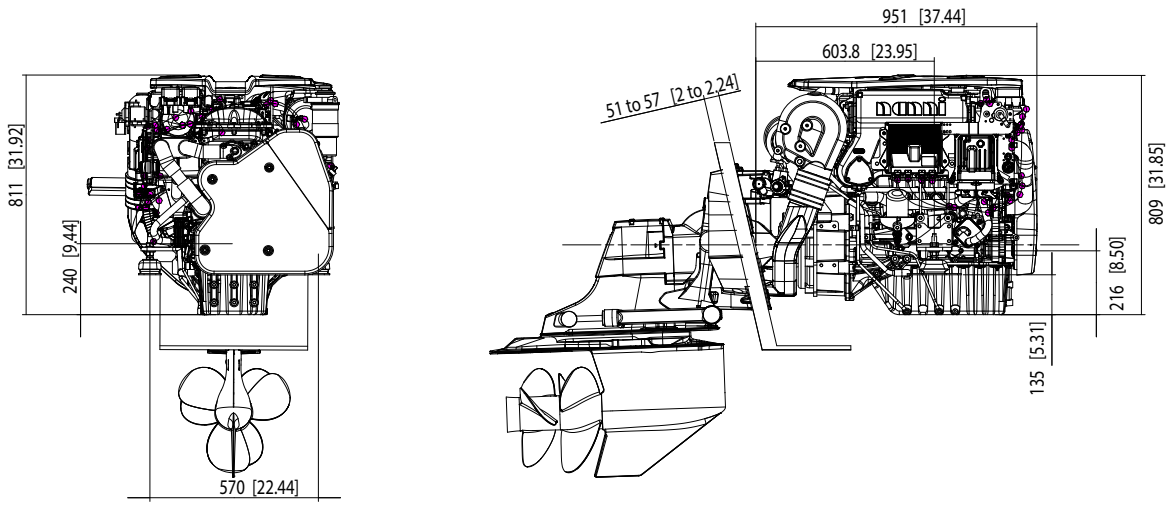

NOTE 1: Dimensions are given in mm [in.].

NOTE 2: data are subject to change witout notice. Text and illustrations are not binding. This document is not suitable for vessel installation.

NOTE 3: Technical data according to ISO 8665.

AUTHORIZED DISTRIBUTOR

Technical data according to ISO 8665. This document is not contractual. Nanni reserves the right to modify any of the characteristics stated in this document without notice, in a constant effort to improve the quality of its products. Images and illustrations may shown non standard equipements. All combination of equipment & accessory are not available.

DGBXXC01070B

NANNI INDUSTRIES S.A.S.
11, Avenue Abbé Mariotte
33260 La Teste - France
Tel +33 (0)5 56 22 30 60
www.nannienergy.com

NANNI SRL
Via degli Olmetti, 44
00060 Formello - Roma - Italia
Tel +39 06 30 88 42 51
www.nannienergy.com